MMSW9SEAE041

SEIWA

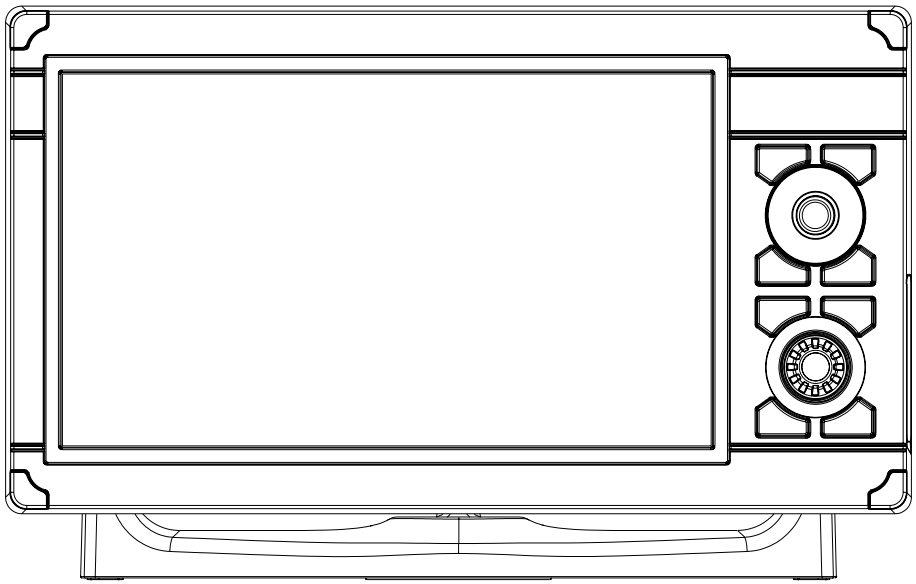

SWx 900

INSTALLATION MANUAL

1. Product description

The SWx 900 Chartplotter series features a 9” marine navigation system with SEIWA ROMEO software. The series includes two versions: SWx 900w and SWx 900cw with WiFi and CHIRP echosounder/fishfinder.

1.1 Content of the package

- SWx 900w / SWx 900cw
- Power supply / Data cable x 1
- Mounting bracket kit x 1
- Screw knob x 2

2. Technical specifications

- Display size: 9”
- Display resolution: 800x480px
- Display brightness: 1100 nits
- Touch-screen: Capacitive multitouch
- Back-lit keyboard
- Built-in GPS sensor: 10Hz GPS/GLONASS
- Built-in Fish Finder CHIRP*
- External GPS connector
- NMEA 2000
- NMEA 0183: 2x Rx/Tx on power cable
- Transducer connector*
- Memory slot: MicroSD
- Wireless LAN connection compatibility
- Mounting options: Bracket and flush mount
- Waterproof: IPX6
- Supply voltage: 10-35 Vdc
- Operating temperature: -10°C / +60°C
- Storage temperature: -20°C / +80°C
- Transmitting frequency range: 2400 - 2483 MHz
- Maximum transmitting power: 100 mW
- Maximum power consumption: 12W or 25W*

* SWx 900cw

3. Installation

3.1 Bracket mount

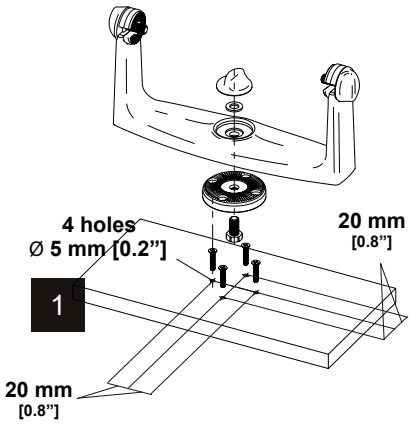

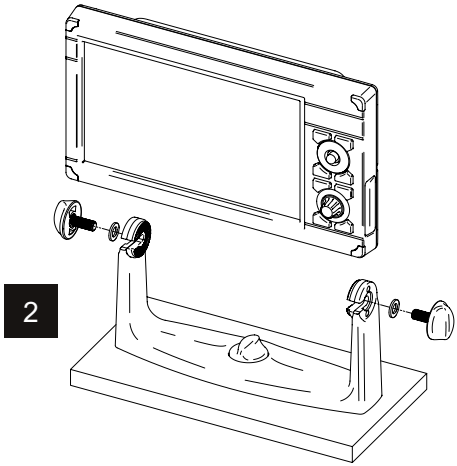

3.2 Panel mount

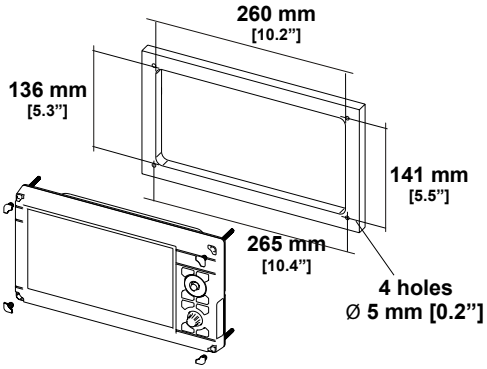

3.3 How to insert the MicroSD

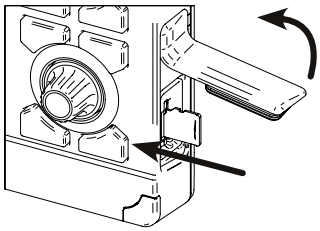

4. Connections scheme

NMEA 2000 Connector	
PIN	**FUNCTION**
1	NOT CONNECT
2	POWER +
3	POWER -
4	SIGNAL H
5	SIGNAL L



GPS Connector (Port C)	
PIN	**FUNCTION**
1	POWER OUTPUT + (10-35 Vdc)
2	OUTPUT C
3	INPUT C
4	NOT CONNECT
5	NOT CONNECT
6	GND / SIGNAL RETURN

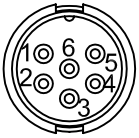

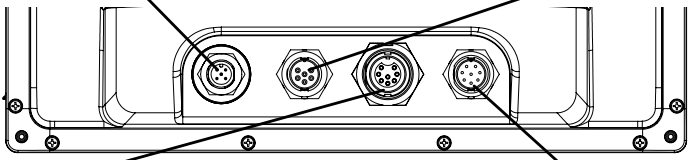

FF Transducer*	
PIN	**FUNCTION**
1	XDR POSITIVE
2	XDR SHIELD
3	TEMP
4	+5V
5	ID
6	GND
7	XDR NEGATIVE
8	SPEED



Power & I/O Connector (Port A & Port B)	
PIN	**FUNCTION**
1	GND
2	POWER INPUT + (10-35 Vdc)
3	INPUT A
4	COMMON
5	OUTPUT B
6	OUTPUT A
7	INPUT B
8	EXTERNAL ALARM OUTPUT

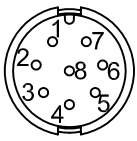

* SWx 900cw

4.1 Power supply connection

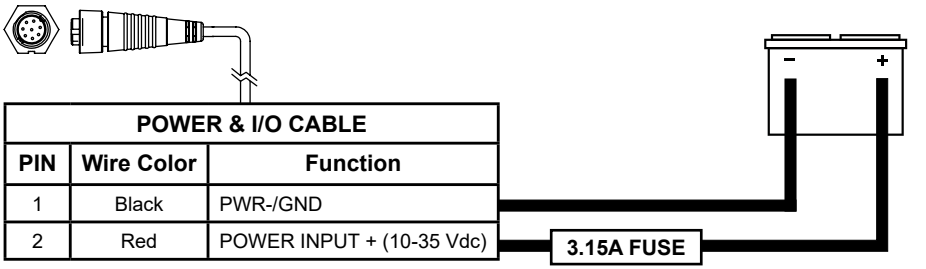

POWER & I/O CABLE		
PIN	**Wire Color**	**Function**
1	Black	PWR-/GND
2	Red	POWER INPUT + (10-35 Vdc)

4.2 Autopilot connections

Autopilot on Port A

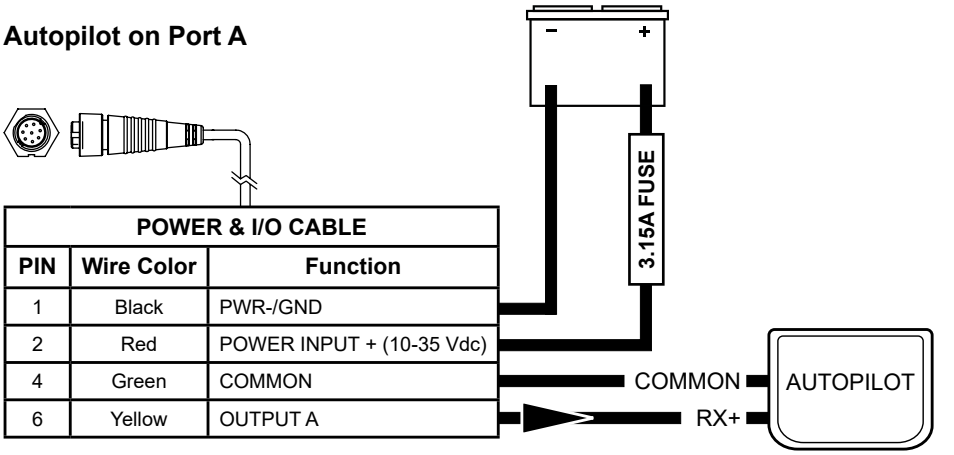

POWER & I/O CABLE		
PIN	**Wire Color**	**Function**
1	Black	PWR-/GND
2	Red	POWER INPUT + (10-35 Vdc)
4	Green	COMMON
6	Yellow	OUTPUT A

WARNING: Do not connect the COMMON connections (green wires) of the I/O ports to the power cables of external devices. This connection could damage the hardware of the device.

Autopilot on Port B

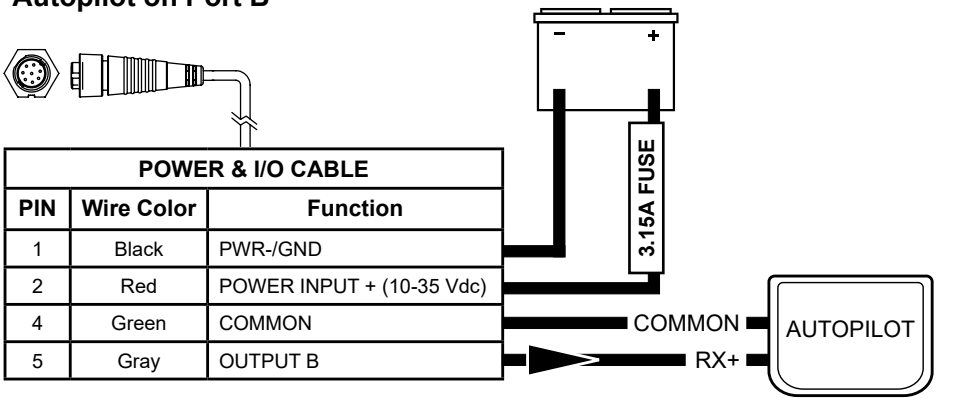

POWER & I/O CABLE		
PIN	**Wire Color**	**Function**
1	Black	PWR-/GND
2	Red	POWER INPUT + (10-35 Vdc)
4	Green	COMMON
5	Gray	OUTPUT B

4.3 External alarm connection

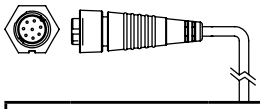

POWER & I/O CABLE		
PIN	**Wire Color**	**Function**
1	Black	PWR-/GND
2	Red	PWR + (10-35 Vdc)
8	Blue	OUTPUT EXTERNAL ALARM (Open Collector)

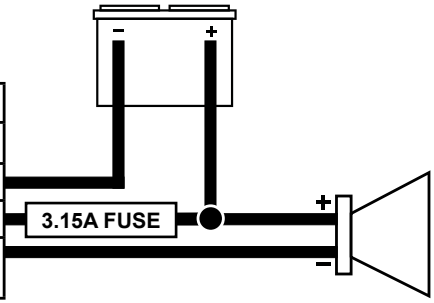

NOTE: Current MAX 300 mA.

4.4 NMEA0183 connections

External NMEA on Port A

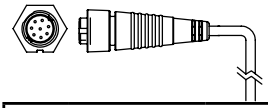

POWER & I/O CABLE		
PIN	**Wire Color**	**Function**
1	Black	PWR-/GND
2	Red	POWER INPUT + (10-35 Vdc)
3	White	INPUT A
4	Green	COMMON
6	Yellow	OUTPUT A

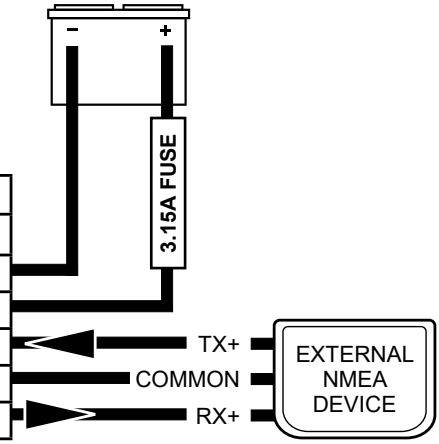

External NMEA on Port B

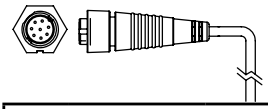

POWER & I/O CABLE		
PIN	**Wire Color**	**Function**
1	Black	PWR-/GND
2	Red	POWER INPUT + (10-35 Vdc)
4	Green	COMMON
5	Gray	OUTPUT B
7	Brown	INPUT B

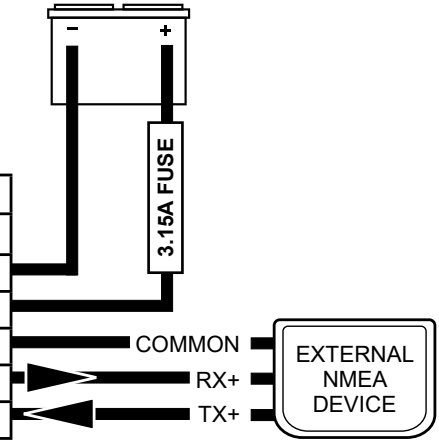

NOTE: NMEA-0183 input baud rate is automatically detected and selected. If you need to set the baud rate manually please go into the settings menu.

5. Keyboard

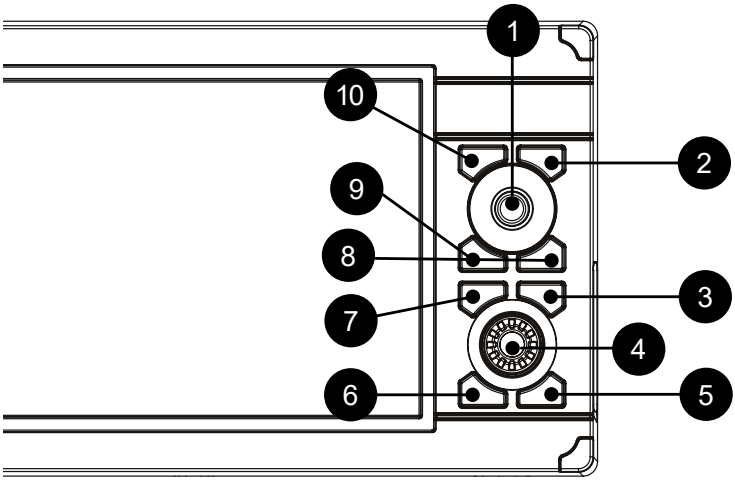

1. The joystick can move the cursor around the map or through menu items. Press [UP], [DOWN], [LEFT] or [RIGHT].
   Each button – except for MOB – can perform two functions: a short press performs the function labeled on the button; a long press (hold) executes the second function labeled on the unit face (for Power key is the opposite).
   [F1 – F3] long press functions can be customized by the user. This gives you a wider scope of options. Read the software manual to learn how to customize the functions keys.
2. [POWER] – [BRIGHTNESS]
   Short press: allows to change the brightness.
   Long press: turns the device on/off when pressed and held in.
3. [F2] – [WP]
   Short press: WP – insert a new waypoint on the cursor position.
4. [ZOOM IN / ZOOM OUT] – [ENTER]
   Rotor: Zoom In/Out if turned on map (it is possible to change default setting to [ROTATE] or [TILT]); if not on map, move the cursor through menu items like joystick.
   Enter: push it to confirm your choice. When on map page, it opens the contextual menu of a map object.
5. [F3] – [TRACK]
   Short press: Track – start and stop the track.
6. [MOB]
   Is a special button dedicated to man-over-board situation. Pressing MOB places a MOB mark on the current boat position and starts navigation to that place.
7. [F1] – [GOTO]
   Short press: Go To – to navigate to a destination (desired position on map)
8. [CLEAR]
   Short press: exits from the current menu (back).
   Long press: allows to come on the main page or, if you are on map page and the cursor is away from the boat position, centers the map on the boat position (home mode).
9. [MARK] – [LIST]
   Short press: allows to add a new mark.
   Long press: open a mark list.
10. [MENU] – [PAGE]
    Short press: Menu – opens the main menu if pressed on one of the main pages (Map, Fish Finder, GPS status, Engine monitor). It selects the top bar control buttons if pressed on full menu pages such as Marks, Routes, Tracks and others.
    Long press: Page – shows the main pages, it is the quicker way to switch between pages.

6. Product conformity information

6.1 FCC compliance

This equipment has been tested and found to comply with the limits for a Class A digital device, pursuant to part 15 of the FCC Rules. These limits are designed to provide reasonable protection against harmful interference when the equipment is operated in a commercial environment. This equipment generates, uses, and can radiate radio frequency energy and, if not installed and used in accordance with the instruction manual, may cause harmful interference to radio communications. Operation of this equipment in a residential area is likely to cause harmful interference in which case the user will be required to correct the interference at his own expense.
Changes or modifications not expressly approved by AvMap Satellite Navigation Inc. could void the user's authority to operate the equipment.

Compliance information statement

<table>
<tr><td rowspan="2">Identification of the product</td><td>Name</td><td>P/N</td></tr>
<tr><td>SWx 900w
SWx 900cw</td><td>P3MR200WSE
P3CR200WSE</td></tr>
<tr><td>Certified components</td><td colspan="2">WiFi and BT module
FCC ID: T7V-9028</td></tr>
<tr><td>Applicable compliance statements</td><td colspan="2">This device complies with part 15 of the FCC Rules. Operation is subject to the following two conditions:
(1) This device may not cause harmful interference, and
(2) This device must accept any interference received, including interference that may cause undesired operation.</td></tr>
<tr><td rowspan="4">Responsible party</td><td>Name</td><td>AvMap Satellite Navigation Inc.</td></tr>
<tr><td>Address</td><td>25 Enterprise Zone Drive,
Riverhead, NY 11901
USA</td></tr>
<tr><td>Phone</td><td>+1-800-363-2627</td></tr>
<tr><td>Website</td><td>www.avmap.us</td></tr>
</table>

6.2 Simplified EU declaration of conformity

Hereby, AvMap Srl, Viale Zaccagna 6, 54033 Carrara (MS), Italy declares that the radio equipments in the following table are in compliance with Directive 2014/53/EU.

SWx 900w	P3MR200WSE
SWx 900cw	P3CR200WSE

The full text of the EU declaration of conformity for every single product is available at the following internet address: **eudeclaration.avmap.it**

6.3 Simplified UKCA declaration of conformity

Hereby, AvMap Srlu, Viale Zaccagna 6, 54033 Carrara (MS), Italy declares that the radio equipment in the following table is in compliance with the relevant statutory requirements:

SWx 900w	P3MR200WSE
SWx 900cw	P3CR200WSE

the full text of the UKCA declaration of conformity is available at the following internet address: **eudeclaration.avmap.it**

7. Safety Information

AvMap disclaims any liability deriving from an improper use or installation of the product in a way that may violate the regulations and safety.
It is highly recommended that the installation of the product will be performed by a qualified maintenance technician.
Consult the Installation manual for a correct installation procedure.

AvMap Srl
Viale Zaccagna 6,
54033 Carrara (MS), Italy
seiwa-marine.com
service@seiwa-marine.com

To ask about this model or to buy

Every sale is made direct, so you can talk it through first

Call

Michael McGlinn

0494 901 661

sales@westcoastmarineelectronics.com.au

https://westcoastmarineelectronics.com.au/

West Coast Marine Electronics, Fremantle, Western Australia

This page was added by West Coast Marine Electronics. The pages of this brochure are the maker's own and have not been changed.
Makers change specifications from time to time, so please call to confirm before you rely on them.