MAR15SEAE010

SI-TEX for

SEIWA

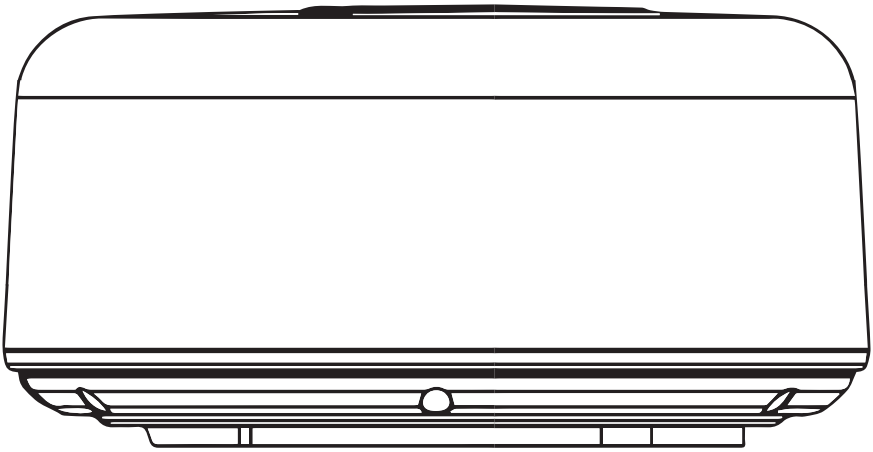

Radar Antenna MDS-15

WARNING AND INSTALLATION MANUAL

Imported by:

AVMAP
ELECTRONICS & TELEMATICS

AvMap Srl
Viale Zaccagna 6, 54033 Carrara (MS), Italy
www.seiwa-marine.com

1. Warranty and warnings

AvMap Srl warrants every unit to be free from defects in material and workmanship under normal use and service for a period of 24 months from original retail purchase. During the warranty period, **AvMap Srl** will repair or replace any component which fails in normal use without charges for parts or labour. Technological developments, modifications and upgrades of software are not covered by warranty. To receive warranty service, contact your local authorized dealer for shipping instructions. The device should be securely packed with its tracking code clearly written on the outside of the package, shipping to be paid by the customer. Include a copy of the original sales receipt as the proof of purchase. This limited warranty does not extend to any device which has been subjected to misuse, neglect, accident, incorrect wiring or improper installation. **AvMap Srl** reserves the right to repair or replace the device at its sole discretion.
For more warranty information please see the web site: www.seiwa-marine.com
For technical advice or assistance in Europe contact:

AvMap Srl
Viale Zaccagna 6, 54033 Carrara (MS), Italy
Customer support: +39-0585-784044
service@seiwa-marine.com

SAFETY INSTRUCTONS	
⚠	"DANGER", "WARNING" and "CAUTION" notices throughout this manual. It is the responsibility of the operator and the installer of the equipment to read, understand and follows these notices. If you have any questions regarding these safety instructions, please contact the Company's customer service or your local dealer.

WARNING	
⚠	Do not open the equipment. Hazardous voltage which can cause electrical shock, burn or serious injury exists inside the equipment. Only qualified personnel should work inside the equipment.
⚠	Wear a safety belt and hard hat when working on the antenna unit. Serious injury or death can result if someone falls from the radar antenna mast.
⚠	Stay away from transmitting antenna. The radar antenna emits microwave radiation which can be harmful to the human body, particularly the eyes. Never look directly into the antenna radiator from a distance of less than 1 m when the radar is in operation.
⚠	Turn off the radar power switch before servicing the antenna unit. Post a warning sign near the switch indicating it should not be turned on while the antenna unit is being serviced. Prevent the potential risk of someone being struck by the rotating antenna and exposure to the RF radiation hazard.
⚠	Do not disassemble or modify the equipment. Fire, electrical shock or serious injury can result.
⚠	Turn off the power immediately if water leaks into the equipment or the equipment is emitting smoke or fire. Continued use of the equipment can cause fire or electrical shock.
⚠	Do not place liquid-filled containers on top of the equipment. Fire or electrical shock can result if liquid spills into the equipment.

2. Foreword

Thank you for choosing the MDS-15 marine radar antenna. The radar antenna is designed and constructed to meet the rigorous demands of the marine environment. However, no machine can perform its intended function unless properly installed and maintained. Please carefully read and follow the recommended procedures for installation, operation and maintenance. While this unit can be installed by the purchaser, any purchaser who has doubts about his or her technical abilities may wish to have the unit installed by an authorized Dealer or other qualified technician.

We want to Hear from you!
Your suggestions and comments are highly important to us. Please send us your feedback at service@seiwa-marine.com.

AvMap Srl
Viale Zaccagna 6, 54033 Carrara (MS), Italy
Customer support: +39-0585-784044
service@seiwa-marine.com

2.1 Content of the package

- MDS-15 marine radar antenna;
- KM-Router;
- Power cable, 15 m;
- Ethernet cable, 15 m;
- Cable installation KIT;
- Warning & Installation manual;

2.2 Features

The main features of the MDS-15 marine radar antenna:
- Built-in ethernet RJ45 connection cable to connect via WiFi router to Seiwa Explorer 23 WiFi, and to SWx charplotter series;
- 4kW high power all weather radar;
- Range up to 36nm;
- Traditional SEIWA quality and reliability in a compact, lightweight and low-cost radar antenna;
- Digital radar target technology;
- Built-in excellent sea and rain clutter algorithm;
- Fully digital signal processing;
- High performance microwave front end.

2.3 Technical Specifications

ANTENNA UNIT
- Radiator: Slotted waveguide array;
- Radiator length: 46 cm;
- Horizontal beamwidth: 5°;
- Vertical beamwidth: 25°;
- Sidelobe:
  - Within + 20° off mainlobe; less than -18 dB
  - Outside + 20° off mainlobe; less than -23 dB
- Polarization: Horizontal
- Antenna rotation speed:
  - Long range (3~36nm): 24 RPM (+2)
  - Medium range (1.5~3nm): 36 RPM (+2)
  - Short range (0.125~1.5nm): 48 RPM (+2)
- Wind resistance: Relative wind speed 100 knots (51.5 m/s)
- Weight: 8,5 kg

TRANSCEIVER MODULE (contained in radome)

- Transmitting tube: MSF1421B or MAF1421B
- Frequency: 9410 MHz + 30MHz
- Peak output power: 4kW nominal
- Pulselength & pulse repetition rate:
  - 0.08 μ S, 2100 Hz (0.125, 0.25, 0.5, 0.75, 1.5nm)
  - 0.3 μ S, 1200 Hz (1.5, 2, 3nm)
  - 0.8 μ S, 600 Hz (3, 4, 6, 8, 12, 16, 24, 36nm)
- Warm up time: 1:30 minutes
- Modulator: FET switching method
- I.F.: 60MHz
- Tuning: Automatic or manual
- Receiver front end: MIC (Microwave IC)
- Bandwidth:
  - Tx pulselength 0.3 μ S and 0.08 μ S: 25MHz
  - Tx pulselength 0.8 μ S: 3MHz
- Duplexer: Circulator with diode limiter

ETHERNET CABLE

- Ethernet cable with RJ45 connector (15 meter)

POWER SUPPLY UNIT

- From 10.5 Vdc to 40 Vdc built-in regulated power supply (15 meter)
- Power consumption: 40W max

ENVIRONMENT

- Temperature:
  Antenna unit; -25°C to +70°C
- Humidity:
  Relative humidity 93% or less at +40°C
- Compass safe distance:

	Standard Compass	Steering Compass
Antenna unit	130 cm	95 cm

3. Installation

This chapter provides the procedures necessary for installation. Installation mainly consists of the following:

- Sitting and mounting the display unit and antenna unit;
- Connection of the signal cable and the power cable;
- Establishing the ground;
- Checking the installation, and adjustments.

3.1 Antenna unit installation, position and handling considerations

- The antenna unit is generally installed either on top of the wheelhouse or on the radar mast on a suitable platform. Locate the antenna unit where there is a good all-round view as far as possible, no part of the ship's superstructure or rigging intercepting the scanning beam. Any obstruction will cause shadow and blind sectors. A mast for instance, with a diameter considerably less than the width of the radiator, will cause only a small blind sector, but a horizontal spreader or crosstrees in the same horizontal plane as the antenna unit would be a much more serious obstruction; you would need

to place the antenna unit well above or below it.

- It is rarely possible to place the antenna unit where a completely clear view in all direction is available. Thus, you should determine the angular width and relative bearing of any shadow sectors for their influence on the radar at the first opportunity after fitting.
- Recommended antenna spacing: 90 cm between GPS & VHF antennas, 60cm between Radar & VHF antennas, 120 cm separation between two VHF antennas.
- To lessen the chance of picking up electrical interference, avoid routing the signal cable near other onboard electrical equipment. Also avoid running the cable in parallel with power cables.
- The compass safe distance should be observed to prevent deviation of the magnetic compass.

Standard Compass	Steering Compass
130 cm	95 cm

- Position the WiFi router and navigation system at a minimum distance of 1,2 meter and a maximum distance of 20 meter, limiting as much as possible interference by metal barriers, walls and other WiFi or strong electronic transmissions.

3.2 Mounting of the MDS-15 Radome

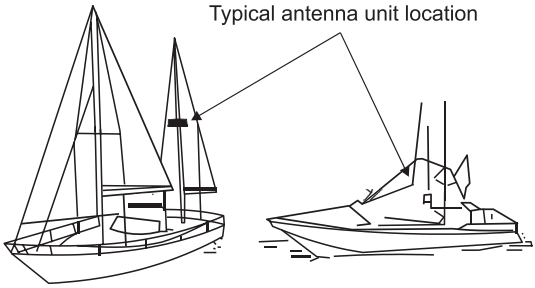

Figure 3.2.a - Typical antenna unit location

1. Open the antenna unit packing box and take out carefully the antenna unit, KM-Router and cable installation KIT.
2. All connections to the radome are done via the external connections at the base of the radome, there is no need to remove the radome cover.
3. Drill 4 holes in the antenna mounting platform , in parallel with the center line of the ship. **NOTE**: see chapter 4 for the drilling holes dimensions.
4. Connect the 15 meter ethernet cable with RJ45 connector to the MDS-15 ethernet port (with black tap).
5. Connect the 15 meter power cable to the MDS-15 power connection port (with blue tap).
6. Use the supplied cable clamp to fix the cables (not do pinch the cable).

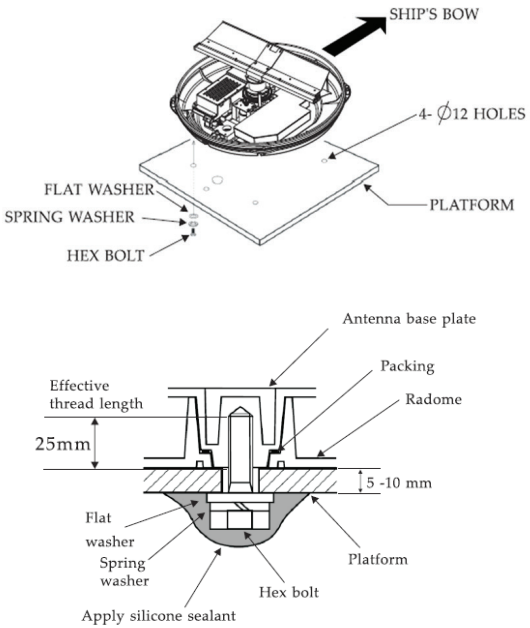

Figure 3.2.b - How to fasten the radome base to the mounting platform

4. Drawings and dimensions

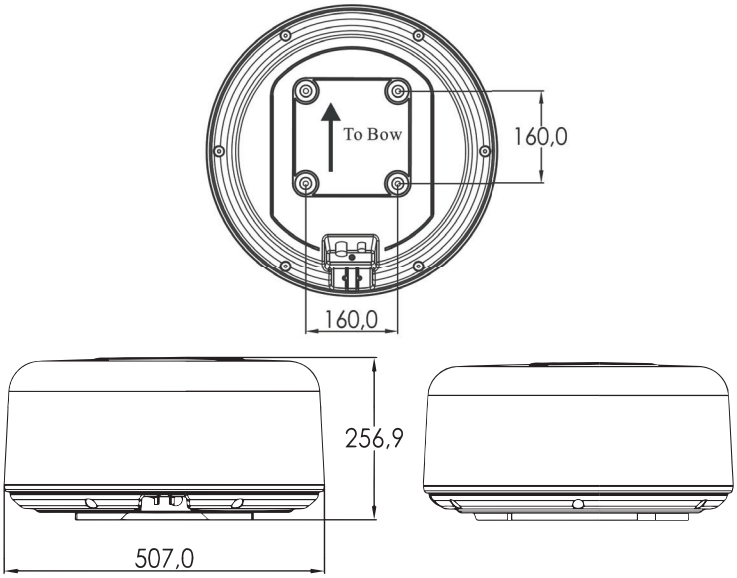

Figure 4. - MDS-15 radar dimensions

5. KM-Router

5.1 Introduction

KM-Router is supplied together with the MDS-15 radar antenna.
KM-Router is a Wi-Fi and Ethernet router, designed to be used onboard a boat, which features 1 WAN port, 4 LAN ports, 1 serial port and WiFi antenna port. It will accept input supply voltage from 10.5 Vdc to 32 Vdc allowing it to be used on a broad range of vessels. It provides similar functionalities of routers used in homes and offices.

5.2. KM-Router package contents

- KM-Router main unit
- Wi-Fi antenna
- Power cable, 2 m
- Ethernet cable with RJ45 connector, 1 m

5.3 First use instructions

- Connect the KM-Router to DC power (10.5 Vdc to 32 Vdc)
- Switch ON the KM-Router
- Once switched ON, the power indicator lights up
- Wait until the WiFi indicator lights up
- The default SSID and password can be found in the serial number label of the KM-Router:
  - Default SSID: KM-Router-(serial number)
  - Password: 12345678

In case you need to change the SSID and password you can connect the router to a PC via any LAN port of the KM-Router and use the web browser to access the management configuration page:
- http:// 223.168.1.253
- Default login ID: admin
- Default login password: admin

Change the new SSID and new password and click on APPLY.

5.4 Panel description



Figure 5.4.a - DB9 Serial Port / WiFi Indicator / Reset Button / Restart Button / On/Off / PWR Connector

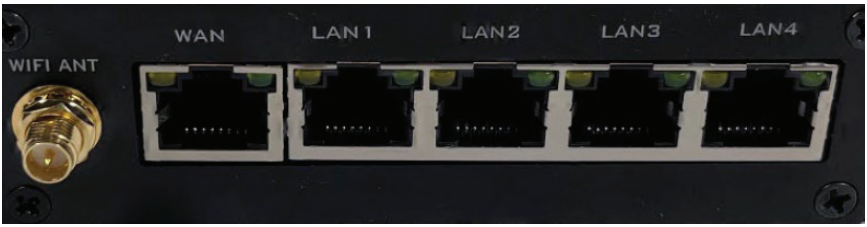

Figure 5.4.b - Wi-Fi antenna connector / WAN Port / LAN Ports 1, 2, 3, 4

NOTE: Once you press the Reset button, you need to connect KM-Router to a PC to set the LAN IP Address again. Connect the router to a PC via any LAN port of the KM-Router and use the web browser to access the management configuration page:

- Default settings after reset: http://192.168.16.254
- Default login ID: admin
- Default login password: admin

5.5 Parameters

Network standard	Wireless standard: IEEE 802.11n, IEEE 802.11g, IEEE 802.11b
	Wired standard: IEEE 802.3, IEEE 802.3u
Wireless transmission rate	11n: Max 150 Mbps
	11g: Max 54 Mbps
	11b: Max 11Mbps
Channels	Jan-14
Frequency range	2.4-2.4835G
Transmit power	12-15dBm
Receiver Sensitivity	-70dB
Connector	1WAN\4LAN\UART
Antenna type	External antenna (IPEX)
Function parameter	
WIFI working mode	STA/AP/Wireless Router
Repeater mode	Support wireless bridge
Wireless security	Wireless MAC address filtering
	Wireless switch security function
	64/128/152bit WEP encryption
	WPA-PSK/WPA2-PSK, WPA-TKIP/WPA2-TKIP security mechanism
Network management	Web interface management
	Configure file lead-in/out
	WEB interface software upgrade
UART to network	TCP socket connection Max connection number >20
	UDP socket connection Max connection number >20
	Serial baud rate 1200—2500000bps (2500000/n 1<=n<=65535)

Power consumption		
MODE	PC (m W)	NOTE
UART TO WIFI	110mA x 5V	AP or STA (all the net ports closed)
UART TO ETH	70mA x 5V	works only in WAN
Gateway mode (default mode)	160mA x 5V	WIFI both WIFI and five NET ports work
Repeater mode (bridge mode)	160mA x 5V	WIFI both WIFI and five NET ports work

5.6 Specifications

- Dimensions: 130 x 31 x 100 mm
- High data processing ability, MCU frequency 580MHz
- 150M Mbps
- Support 802.11b/g/n mode
- 20/40 channel bandwidth
- Support 802.11v
- Support AP, STA and AP, STA mixed
- Fifth 10/100M adaptive com port
- Inbuilt powerful PMU
- Support 16 Multiple BSSID
- Support multiple encryption WEP64/128, TKIP, AES, WPA, WPA2, WAPI
- Support QoS, WMM, WMM-PS
- Power supply: 10.5 - 32 Vdc, max. 50 mA at 12 Vdc
- Working temperature: -20ºC - +65ºC
- Humidity: 90% +/-3% at 40ºC
- Waterproof: IPX2

6. Connections

The radar antenna connects via ethernet cable to an external WiFi router (KM-Router included in the box) to provide a stable signal. Through the WiFi router, the radar antenna MDS-15 connects wirelessly to the navigation system.
MDS-15 is compatible with SEIWA EXPLORER 23 WiFi, SWx 900 and SWx 1200 series.

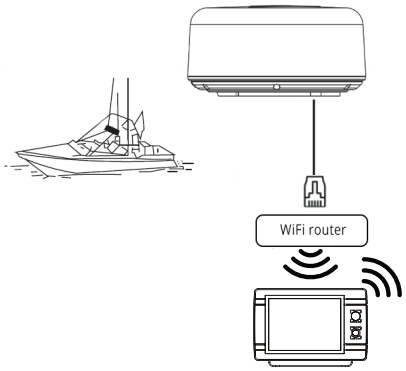

Figure 6.0.a - Radar connection to the navigation system

6.1 Setup configuration

1. Connect the MDS-15 ethernet cable with RJ45 plug into any LAN port of the pre-configured KM-Router.
   IMPORTANT: Do not connect to the WAN port.
2. Connect the KM-Router to correct power source as specified in chapter 5.
3. Turn ON the KM-Router by using the ON/OFF button and wait for the green Wi-Fi indicator light to start flashing.
4. Connect the radar MDS-15 to correct power source as shown on figure 6.1.
5. Power on the radar MDS-15.
6. Power on the Seiwa WiFi navigation system.
7. In the main menu of the Seiwa WiFi navigation system open the “Ports and Connectivity” menu, select WiFi and enable Wireless LAN. After that you can select the WiFi router (KM-Router-xxxx) from the list of available networks and use password “12345678” to connect.

NOTE: if you use another WiFi router program and pre-configure the WiFi router settings as following:
- Set the WiFi router IP Address to 223.168.1.1
- Set WiFi router USERNAME and PASSWORD as per your preference.

NOTE: The network will be remembered by the Seiwa WiFi navigation system and next time it will be connected automatically.

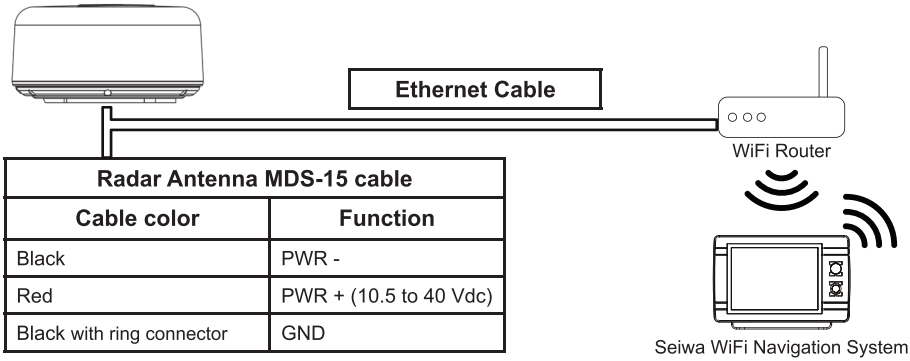

Radar Antenna MDS-15 cable	
Cable color	**Function**
Black	PWR -
Red	PWR + (10.5 to 40 Vdc)
Black with ring connector	GND

Figure 6.1. - Connections

NOTE: the ground wire (black cable with ring connector) is used to connect to the grounding of the metal boat. For wooden or fibreglass boats it is not needed to connect the ground wire.
NOTE: it is suggested to add a power switch with fuse (5A for 12V and 3A for 24V) for the radar antenna.

7. Product conformity information

7.1 Simplified EU declaration of conformity

Hereby,
SI-TEX Marine Electronics, 25 Enterprise Zone Drive suite 2, Riverhead, NY 11901, USA declares that the radio equipments in the following table are in compliance with Directive 2014/53/EU.

Si-Tex 4kW Radar Antenna	MDS-15
Si-Tex Router	KM-Router

The full text of the EU declaration of conformity for every single product is available at the following internet address: **eudeclaration.avmap.it**



AvMap Srl
Viale Zaccagna 6,
54033 Carrara (MS), Italy
seiwa-marine.com
service@seiwa-marine.com

To ask about this model or to buy

Every sale is made direct, so you can talk it through first

Call

Michael McGlinn

0494 901 661

sales@westcoastmarineelectronics.com.au

https://westcoastmarineelectronics.com.au/

West Coast Marine Electronics, Fremantle, Western Australia

This page was added by West Coast Marine Electronics. The pages of this brochure are the maker's own and have not been changed.
Makers change specifications from time to time, so please call to confirm before you rely on them.