MMC1SSEAE041

SEIWA

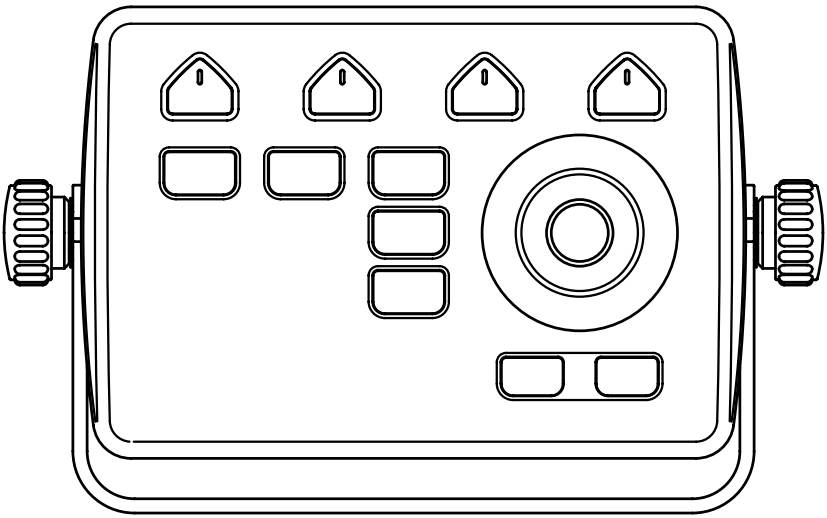

EXPLORER 23

INSTALLATION MANUAL

1. Product description

EXPLORER 23 includes chartplotter and multifunction controller in a compact, robust blackbox designed for fishermen. EXPLORER 23 must be connected to an external monitor. It is available in two versions: EXPLORER 23 and EXPLORER 23 WiFi.

1.1 Content of the package

- EXPLORER 23 with built-in HDMI cable
- Power supply + NMEA0183 cable
- Metal Mount with screws

2. Technical specifications

- Dimensions: 172.5 x 106.5 x 84.4 mm (6.8'' x 4.2'' x 3.3'') with holder
- Weight: 350 g (12.3 oz)
- Back-lit keyboard
- Integrated remote control receiver (radio IF 2.4 Ghz)
- External GPS connector
- NMEA 2000
- NMEA 0183: 2x Rx/Tx on power cable
- External alarm
- Built-in HDMI video input cable (compatible with any HDMI display)
- Memory slot: MicroSD
- Wireless LAN connection compatibility*
- Mounting options: Bracket and flush mount
- Waterproof IPX6
- Supply Voltage: 10-35 Vdc
- Operating temperature: -10°C / +60°C
- Storage temperature: -20°C / +80°C
- Transmitting frequency range: 2400 - 2483 MHz
- Maximum transmitting power: 1mW (or 100mW*)
- Maximum power consumption: 4W (or 6.5W*)

*EXPLORER 23 WiFi

3. Installation

3.1 Bracket Mount

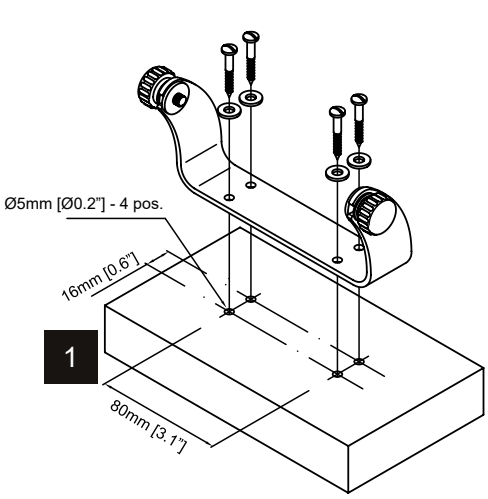

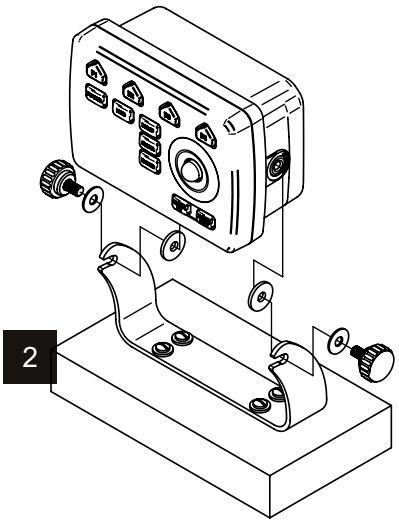

3.2 Panel Mount

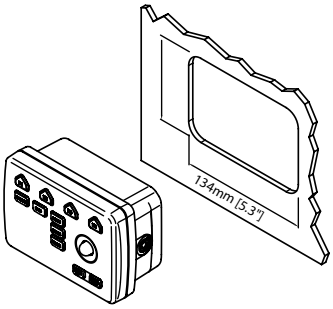

3.3 How to insert the MicroSD

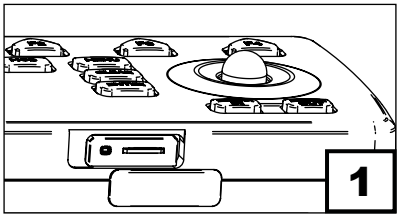

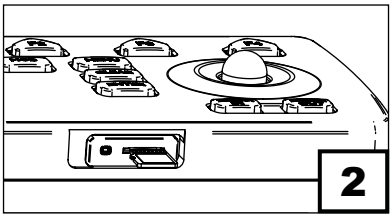

4. Connections scheme

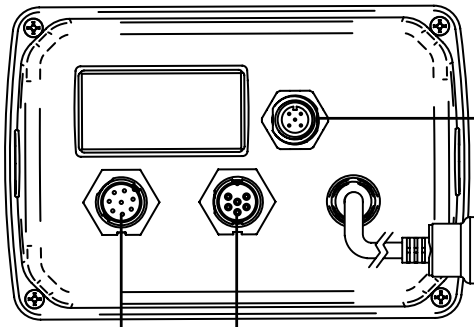

NMEA 2000 Connector	
PIN	**FUNCTION**
1	NOT CONNECT
2	POWER +
3	POWER -
4	SIGNAL H
5	SIGNAL L



Power & I/O Connector (Port A and C)	
PIN	**FUNCTION**
1	PWR-/GND
2	POWER INPUT + (10-35 Vdc)
3	INPUT A
4	COMMON
5	OUTPUT C
6	OUTPUT A
7	INPUT C
8	EXTERNAL ALARM OUTPUT +

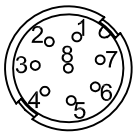

GPS Connector (Port B)	
PIN	**FUNCTION**
1	POWER OUTPUT + (10-35 Vdc)
2	OUTPUT B
3	INPUT B
4	NOT CONNECT
5	NOT CONNECT
6	GND / SIGNAL RETURN

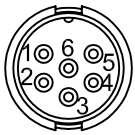

4.1 Power supply connection

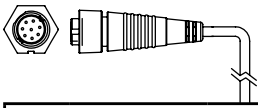

POWER & I/O CABLE		
PIN	**Wire Color**	**Function**
1	Black	PWR-/GND
2	Red	POWER INPUT + (10-35 Vdc)

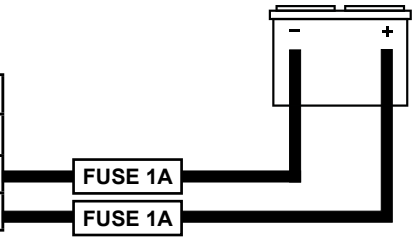

4.2 Autopilot connections

Autopilot on Port A

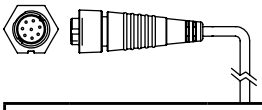

POWER & I/O CABLE		
PIN	**Wire Color**	**Function**
1	Black	PWR-/GND
2	Red	POWER INPUT + (10-35 Vdc)
4	Green	COMMON
6	Yellow	OUTPUT A

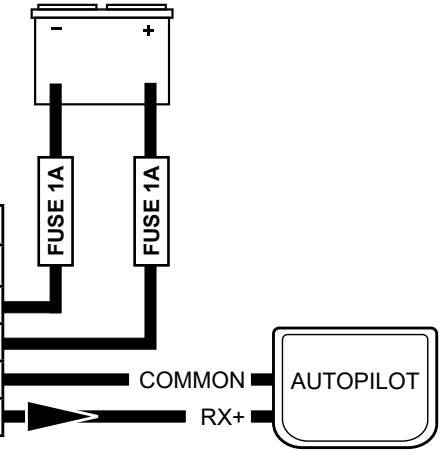

WARNING: Do not connect the COMMON connections (green wires) of the I/O ports to the power cables of external devices. This connection could damage the hardware of the device.

Autopilot on Port C

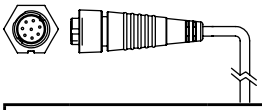

POWER & I/O CABLE		
PIN	**Wire Color**	**Function**
1	Black	PWR-/GND
2	Red	POWER INPUT + (10-35 Vdc)
4	Green	COMMON
5	Gray	OUTPUT C

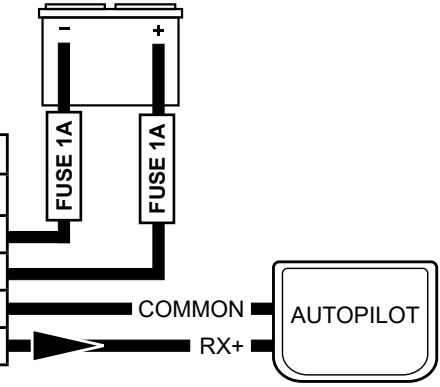

4.3 External alarm connection

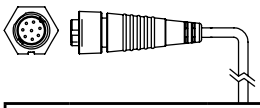

POWER & I/O CABLE		
PIN	**Wire Color**	**Function**
1	Black	PWR-/GND
2	Red	PWR + (10-35 Vdc)
8	Blue	OUTPUT EXTERNAL ALARM (Open Collector)

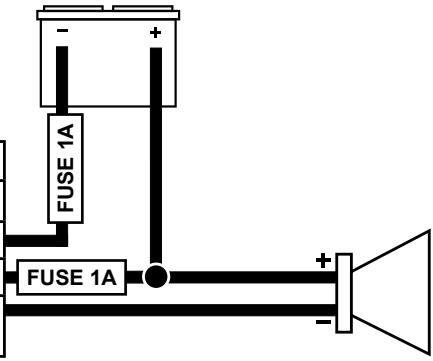

NOTE: Current MAX 300 mA

4.4 NMEA0183 connections

External NMEA on Port A

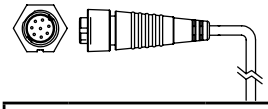

POWER & I/O CABLE		
PIN	**Wire Color**	**Function**
1	Black	PWR-/GND
2	Red	POWER INPUT + (10-35 Vdc)
3	White	INPUT A
4	Green	COMMON
6	Yellow	OUTPUT A

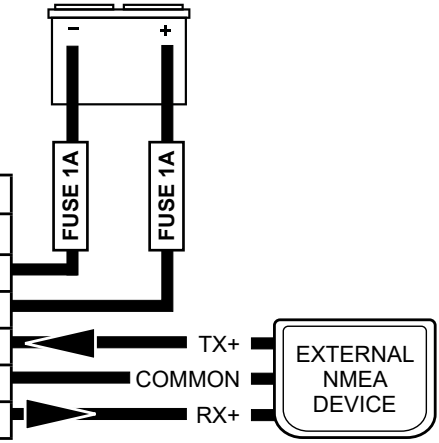

External NMEA on Port C

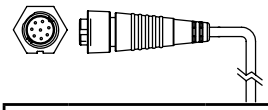

POWER & I/O CABLE		
PIN	**Wire Color**	**Function**
1	Black	PWR-/GND
2	Red	POWER INPUT + (10-35 Vdc)
4	Green	COMMON
5	Gray	OUTPUT C
7	Brown	INPUT C

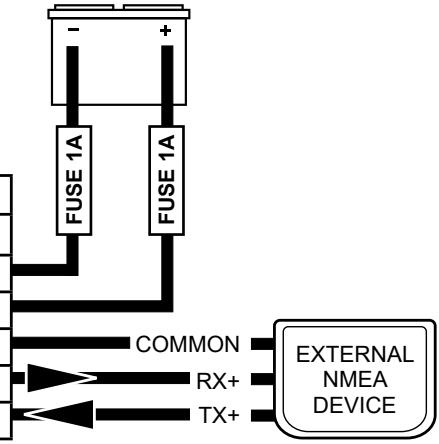

5. Keyboard

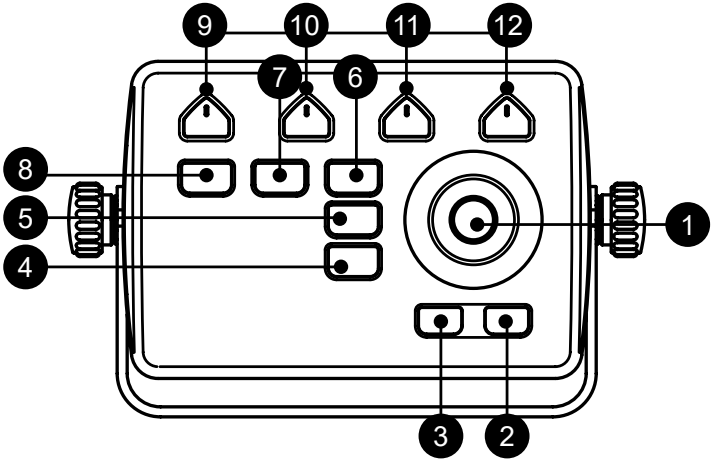

1. The joystick can move the cursor around the map or through menu items. Press [UP], [DOWN], [LEFT] or [RIGHT].
2. [ZOOM OUT]
   Change the scale of the map zooming out.
3. [ZOOM IN]
   Change the scale of the map zooming in.
4. [ENTER]
   Push it to confirm your choice. When on map page, it opens the contextual menu of a map object.
5. [CLEAR]
   Short press: exits from the current menu (back).
   Long press: allows to come on the main page or, if you are on map page and the cursor is away from the boat position, centers the map on the boat position (home mode).
6. [MENU] – [PAGE]
   Short press: Menu – opens the main menu if pressed on one of the main pages (Map, Fish Finder, GPS status, Engine monitor). It selects the top bar control buttons if pressed on full menu pages such as Marks, Routes, Tracks and others.
   Long press: Page – shows the main pages, it is the quicker way to switch between pages.
7. [MOB]
   Is a special key dedicated to man-over-board situation. Pressing MOB places a MOB mark on the current boat position and starts navigation to that place.
8. [POWER] – [DAY / NIGHT]
   Short press: allows switching Day/Night modes.
   Long press: turns the device on/off when pressed and held in.

   [F1 – F4] are special keys. Each key can perform two functions: a short press performs the fixed function labeled on the unit face. A long press (hold) executes the second function which can be customized. Read the software manual to learn how to customize the function keys.
9. [F1] – [WP]
   Short press: WP – insert a new waypoint on the cursor position.
10. [F2] – [MARK]
    Short press: Mark – allows to add a new mark.
11. [F3] – [TRACK]
    Short press: Track – start and stop the track.
12. [F4] – [GOTO]
    Short press: Go To – to navigate to a destination (desired position on map).

6. Product conformity information

6.1 FCC compliance

This equipment has been tested and found to comply with the limits for a class B digital device, pursuant to part 15 of the FCC Rules. These limits are designed to provide reasonable protection against harmful interference in a residential installation. This equipment generates, uses and can radiate radio frequency energy and if not installed and used in accordance with the instructions, may cause harmful interference to radio communications. However, there is no guarantee that interference will not occur in a particular installation. If this equipment does cause harmful interference to radio or television reception, which can be determined by turning the equipment off and on, the user is encouraged to try to correct the interference by one or more of the following measures:

- Reorient or relocate the receiving antenna.
- Increase the separation between the equipment and receiver.
- Connect the equipment into an outlet on a circuit different from that to which the receiver is connected.
- Consult the dealer or an experienced radio/TV technician for help.

Changes or modifications not expressly approved by AvMap Satellite Navigation Inc. could void the user's authority to operate the equipment.

Compliance information statement

<table>
<tr><td rowspan="2">Identification of the product</td><td>Name</td><td>P/N</td></tr>
<tr><td>Explorer 23
Explorer 23 WiFi</td><td>P3MC1000SE
P3MC100WSE</td></tr>
<tr><td>Certified components</td><td colspan="2">Remote control receiver: FCC ID: CU9- P3MC1000
WiFi and BT module (EXPLORER 23 WiFi only):
FCC ID: T7V-9028</td></tr>
<tr><td>Applicable compliance statements</td><td colspan="2">This device complies with part 15 of the FCC Rules. Operation is subject to the following two conditions: (1) This device may not cause harmful interference, and (2) This device must accept any interference received, including interference that may cause undesired operation.</td></tr>
<tr><td rowspan="4">Responsible party</td><td>Name</td><td>AvMap Satellite Navigation Inc.</td></tr>
<tr><td>Address</td><td>25 Enterprise Zone Drive,
Riverhead, NY 11901, USA</td></tr>
<tr><td>Phone</td><td>+1-800-363-2627</td></tr>
<tr><td>Website</td><td>www.avmap.us</td></tr>
</table>

6.2 Simplified EU declaration of conformity

Hereby, AvMap Srl, Viale Zaccagna 6, 54033 Carrara (MS), Italy declares that the radio equipments in the following table are in compliance with Directive 2014/53/EU.

Explorer 23	P3MC1000SE
Explorer 23 WiFi	P3MC100WSE

The full text of the EU declaration of conformity for every single product is available at the following internet address: **eudeclaration.avmap.it**

6.3 Simplified UKCA declaration of conformity

Hereby, AvMap Srlu, Viale Zaccagna 6, 54033 Carrara (MS), Italy declares that the radio equipment in the following table is in compliance with the relevant statutory requirements:

Explorer 23	P3MC1000SE
Explorer 23 WiFi	P3MC100WSE

the full text of the UKCA declaration of conformity is available at the following internet address: **eudeclaration.avmap.it**

7. Safety Information

AvMap disclaims any liability deriving from an improper use or installation of the product in a way that may violate the regulations and safety.
It is highly recommended that the installation of the product will be performed by a qualified maintenance technician.
Consult the Installation manual for a correct installation procedure.

AvMap Srl
Viale Zaccagna 6,
54033 Carrara (MS), Italy
seiwa-marine.com
service@seiwa-marine.com

To ask about this model or to buy

Every sale is made direct, so you can talk it through first

Call

Michael McGlinn

0494 901 661

sales@westcoastmarineelectronics.com.au

https://westcoastmarineelectronics.com.au/

West Coast Marine Electronics, Fremantle, Western Australia

This page was added by West Coast Marine Electronics. The pages of this brochure are the maker's own and have not been changed.
Makers change specifications from time to time, so please call to confirm before you rely on them.