SPECIFICATIONS

Antenna-Scanner unit

Model	MDC-921	MDC-941	MDC-940
Antenna type	Radome		Open array
Antenna length	1.2 feet	2 feet	3 feet /4 feet
Output power (Peak)	2 kW	4 kW	
Output frequency	9445 MHz ± 30 MHz	9410 MHz ± 30 MHz	
Horizontal beam width	6.0°	3.9°	3 feet: 2.5° 4 feet: 1.8°
Vertical beam width	25°		22°
Rotation	24 rpm	24 rpm or 48 rpm	24 rpm or 48 rpm (48 rpm: 24 VDC or more)
IF center frequency	60 MHz		
Range accuracy	better than 8 m		
Minimum detecting distance	within 30 m	within 25 m	
Range resolution	within 30 m	within 25 m	
Warm-up time	2 min		
Pulse width	0.1 us, 0.15 us, 0.3 us, 0.5 us, 1 us		

Environmental

Operating temperature	-25°C to +55°C		
Water protection	CFR-46	IPX6	IPX6

Display unit

Model	MDC-921	MDC-941	MDC-940
Basic ranges	0.0625 to 24 NM	0.0625 to 32 NM	0.0625 to 48 NM
Display unit	MRD-103		
Display size and type	8.4" color TFT LCD		
Effective diameter	127.4 mm		
Display resolution	480 x 640 pixels		
Off-centering	Max. 66%		
Echo area	2 types (Full screen, Inside of effective diameter)		
Presentation modes	Head-up, North-up (True motion***/Relative motion*), Course-up (True motion*** / Relative motion*), WPT-up **		
Indication system	PPI, PPI/PPI, PPI/NAV		
Rings interval	0.03125(0.0625), 0.0625(0.125), 0.125(0.25,0.5), 0.25(0.75,1), 0.5(1.5,2), 0.75(3), 1(4),1.5(6), 2(8), 3(12), 4(16), 6(24), 8(32), 12(48) ( ): Range scales		
Range scales	0.0625,0.125,0.25,0.5,0.75,1,1.5,2,3,4,6,8,12,16,24,32,48 nm (MDC-921 up to 24 nm, MDC-941 up to 32 nm, MDC-940 up to 48 nm)		
Video level	8 levels (colors)		
Distance unit (VRM UNIT)	NM, sm, km		
Alarms	Echo (IN /OUT), ATA (CPA / CPT) etc.		
Functions	Interference rejection, Target expansion, VRM, EBL (true* / relative) , Parallel index, Cursor position (Lat / Lon)***, Bearing (true* / relative), Trail***, RGB Monitor output, Slave display monitor input/output, External buzzer output, Accepts CCD camera input		
Input data format and sentences	NMEA 0183 (Ver. 1.5 / 2.0 / 3.0) BEC, BWC, BWR, DPT, DBT, GGA, GLL, GNS, HDG, HDM, HDT, MTW, MWD, MWV, RMA, RMB, RMC, VHW, VTG, XTE		
Output data format and sentences	NMEA 0183 (Ver. 2.0) TTM, TLL		
NMEA ports	Total 2 : input and output		
ATA***	Option (Auto/Manual 50 Targets)		
AIS interface***	Option (100 Targets)		
Power supply	10.8 to 31.2 VDC		
Power consumption (at 24 VDC)	45 W or less	55 W or less	70 W or less

Environmental

Operating temperature	-15°C to +55°C
Water protection	IPX5

* Requires bearing data input.
** Requires waypoint data input.
*** Requires bearing data, ship's speed data and latitude / longitude data input.

CONNECTIONS

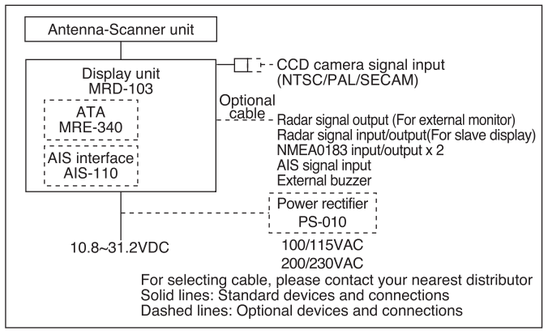

EQUIPMENT LIST

Standard Equipment

Antenna-Scanner unit	RB714A	1.2 feet	2 kW	MDC-921
	RB715A	2 feet	4 kW	MDC-941
Scanner	RB716A		4 kW	MDC-940
Antenna	RW701A-03	3 feet		MDC-940
	RW701A-04	4 feet		MDC-940
Display unit	MRD-103	with hard cover		
Connecting cable	242J160680A-10M	With two connectors, MDC-921		
	242J158055A-10M	With two connectors, MDC-941		
	242J159098A-10M	With two connectors, MDC-940		
DC power cable	CW-265-2M	2 m		
CCD camera cable	CW-405-0.3M			
Operation manual, Quick reference, Fuse (8A)				

Option

ATA, AIS interface, Gyro/Log interface, Power rectifier, AC power cable,
Connecting cable for external monitor / external buzzer

DIMENSIONS AND WEIGHT

Display unit: mm (inch)
MRD-103(MDC-900 series)

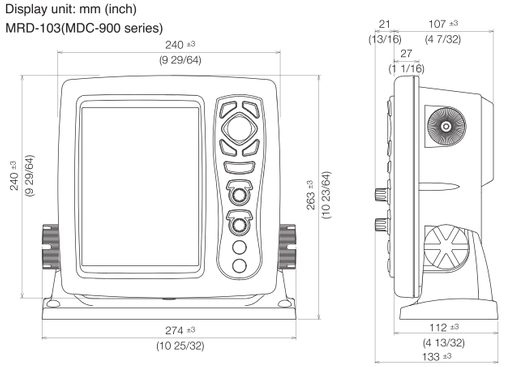

Weight : 3.4 kg (7.5 lb)

Antenna - scanner unit:

RB714A



RB715A

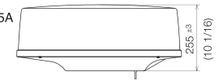

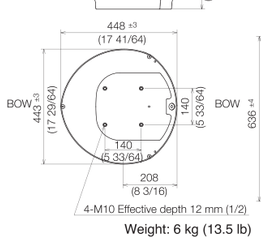

Weight: 6 kg (13.5 lb)

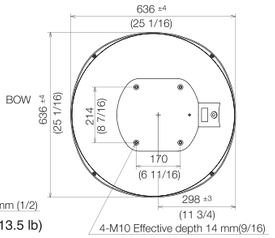

Weight: 10 kg (22.5 lb)

RB716A with RW701A-03/04

3Feet: 1034(40 11/16) ±5
4Feet: 1346(53) ±10

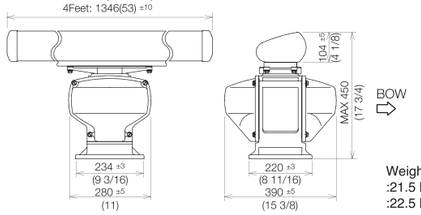

Weight for RB716A
:21.5 kg (47 lb) 3 feet
:22.5 kg (50 lb) 4 feet

• Design and specifications are subject to change without notice.

KODEN Koden Electronics Co., Ltd.

Tamagawa Office:
2-13-24 Tamagawa, Ota-ku, Tokyo, 146-0095 Japan
Tel: +81-3-3756-6501 Fax: +81-3-3756-6509
Uenohara Office:
5278 Uenohara, Uenohara-shi, Yamanashi, 409-0112 Japan
Tel: +81-554-20-5860 Fax: +81-554-20-5875

overseas@koden-electronics.co.jp

www.koden-electronics.co.jp

Safety precaution To ensure proper and safe use of the equipment, please carefully read and follow the instructions in the Operation Manual.

For details, please contact:

15-05, Printed in Japan

KODEN

8.4-inch Color LCD
Marine Radar

MDC-900 Series

8" REVOLUTION !



MDC-900 Series

High-performance, sophisticated signal processing, usually found only in larger professional grade radars.

MDC-921 : 2 kW, 1.2 feet Radome
MDC-941 : 4 kW, 2 feet Radome
MDC-940 : 4 kW, 3 feet / 4 feet Open





True trail function

The display shows exactly the movement of other vessels like drawing tails, while land and buoys are shown as stationary objects even while your vessel is moving. This makes it easy for you to distinguish moving from stationary objects.

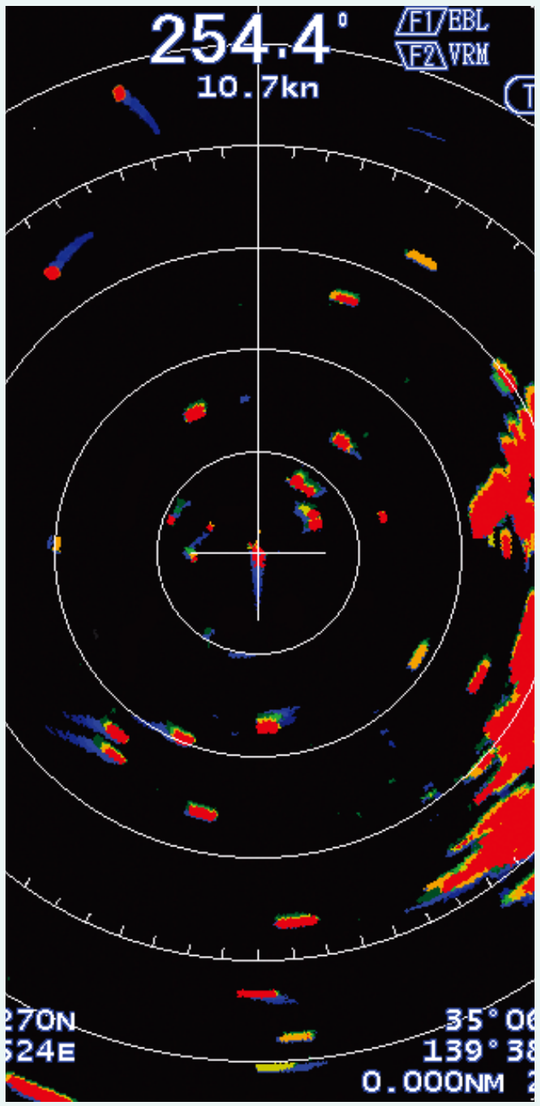

Dual range display

Exclusive dual range radar feature lets you view split-screen display of both long and short-range targets simultaneously. It's like having two radars in one.

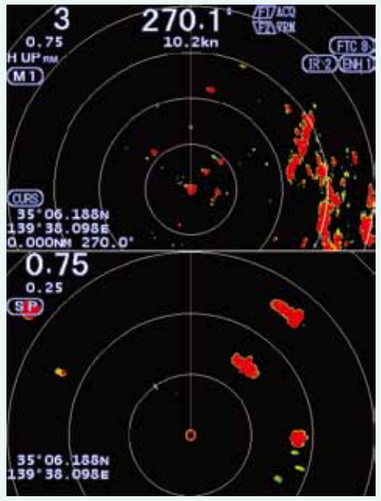

CCD Camera input

Accepts CCD camera input, with which you can watch above deck and below deck any time you are steering.

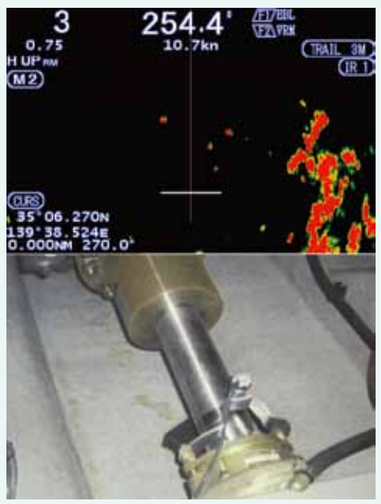

ATA with up to 50 targets as option

The convenient ATA (Automatic Tracking Aid) function comes as option.
The latest movements of other vessels can be shown instantaneously in vector form and numeric form, ensuring safe navigation.
When the automatic acquisition zone is set, up to 50 targets entering the zone will be locked automatically.

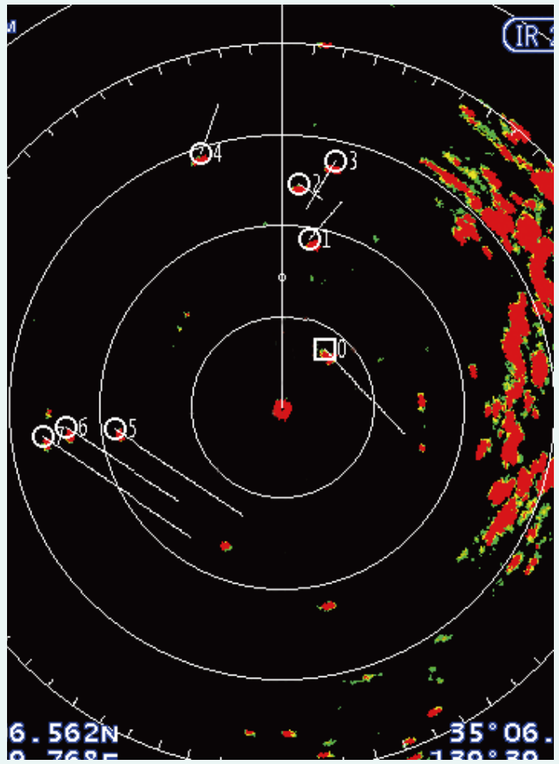

AIS interface up to 100 targets as option

When connected with an AIS receiver, the radar displays information on up to 100 targets including the name, heading, and speed of each vessel with an AIS transmitter mounted.

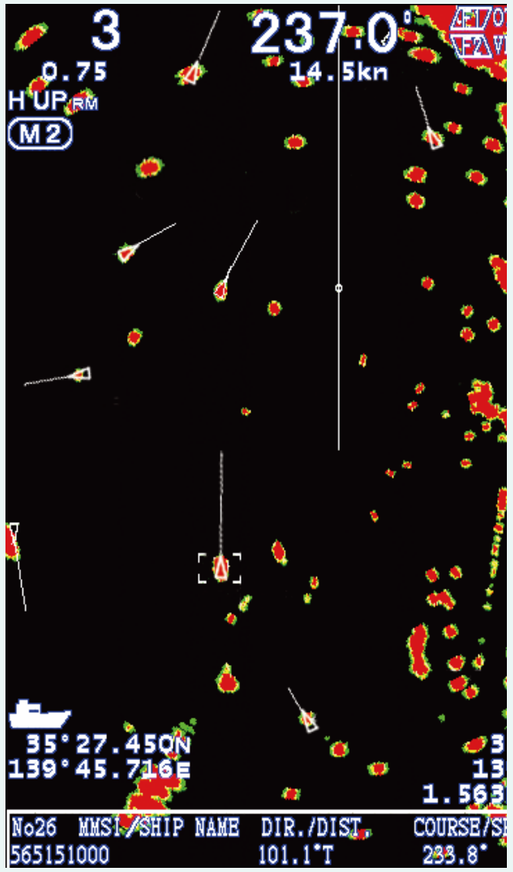

Other features

Direct bonding of Anti-Reflecting coating filter to LCD for increasing visibility and preventing condensation.

Real time smooth Head-up indication.

RGB output available for connecting external monitor. You can monitor the Radar even when you are away from steering.

Easy operation with dedicated control knobs for Gain and STC.

New sleek, compact case design can be mounted almost anywhere.

Built-in flush-mounting system for easy installation, as you can mount screws from front side.



To ask about this model or to buy

Every sale is made direct, so you can talk it through first

Call

Michael McGlinn

0494 901 661

sales@westcoastmarineelectronics.com.au

https://westcoastmarineelectronics.com.au/

West Coast Marine Electronics, Fremantle, Western Australia

This page was added by West Coast Marine Electronics. The pages of this brochure are the maker's own and have not been changed. Makers change specifications from time to time, so please call to confirm before you rely on them.