10.4-inch Color LCD
Marine Radar

MDC-2000 Series

Smart selection for safe navigation



Features

Dual range display
Exclusive dual range radar function lets you have split-screen display of both long and short-range simultaneously.
It is like having two radars in one.

True Trail function
True Trail function clearly identifies moving targets from stationary targets like land or buoys.

SPECIFICATIONS

Antenna-Scanner unit

Model	MDC-2041	MDC-2040		MDC-2060		MDC-2010	
Type	RB715A	RB716A		RB717A		RB718A	
Antenna type	Radome	Open antenna					
Antenna length	2 feet	3 feet	4 feet	4 feet	6 feet	4 feet	6 feet
Output power (Peak)	4 kW			6 kW		12 kW	
Output frequency	9410 MHz ± 30 MHz						
Horizontal beam width	3.9°	2.5°	1.8°	1.8°	1.2°	1.8°	1.2°
Vertical beam width	25°	22°					
Rotation	24 rpm or 48 rpm						
IF center frequency	60 MHz						
Range accuracy	8 meters or 1% of the range scale selected,whichever is the greater						
Bearing accuracy	1° or less						
Minimum detecting distance	Within 25 m						
Range resolution	Within 25 m						
Pulse width	0.08 us, 0.15 us, 0.3 us, 0.5 us, 1 us						

Environmental

Operating temperature	-25°C to +55°C
Water protection	IPX6

Display unit

Model	MDC-2041	MDC-2040	MDC-2060	MDC-2010
Display size and type	10.4" color TFT LCD			
Effective diameter	157.4 mm			
Display resolution	480 x 640 pixels (VGA)			
Off-centering	Max. 66%			
Echo area	2 types (Full screen, Inside of effective diameter)			
Basic Range	0.0625 to 32 NM	0.0625 to 48 NM	0.0625 to 64 NM	0.0625 to 72 NM
Range scales	0.0625 | 0.125 | 0.25 | 0.5 | 0.75 | 1 | 1.5 | 2 | 3 | 4 | 6 | 8 | 12 | 16 | 24 | 32 | 48 | 64 | 72			
Range interval	0.03125 | 0.0625 | 0.125 | 0.25 | 0.5 | 1 | 2 | 3 | 4 | 6 | 8 | 12 | 16 | 18			
Presentation modes	Head-up, North-up*, Course-up*, WPT-up**			
Indication system	PPI, PPI/PPI, PPI/NAV			
Video level	8 levels (colors)			
Range unit	NM, km, sm			
Alarms	Echo (IN / OUT), ATA / AIS (CPA / TCPA) etc.			
Functions	Interference rejection, Target expansion, VRM, EBL (true* / relative), Parallel index, Cursor position (Lat / Lon)***, Bearing (true* / relative) , Trail***, RGB Monitor output, Slave display monitor input/output, External Buzzer output, Accepts CCD camera input, etc.			
Input data format and sentences	NMEA0183 Ver.1.5/2.0/3.0 BEC, BWC, BWR, DPT, DBT, GGA, GLL, GNS, HDG, HDM, HDT, MTW, MWD, MWV, RMA, RMB, RMC, VHW, VTG, XTE			
Output data format and sentences	NMEA0183 Ver.2.0 TTM, TLL			
NMEA input / output(s)	2			
AIS interface***	100 targets (Option)			
ATA***	50 targets (Option)			
Power supply	10.8 to 31.2 VDC			
Power consumption (at 24 VDC)	65 W or less	80 W or less	110 W or less	130 W or less

Environmental

Operating temperature	-15°C to +55°C
Water protection	IPX5

* Requires bearing data input.
** Requires waypoint data input.
*** Requires bearing data, ship's speed data and latitude / longitude data input.

CONNECTIONS

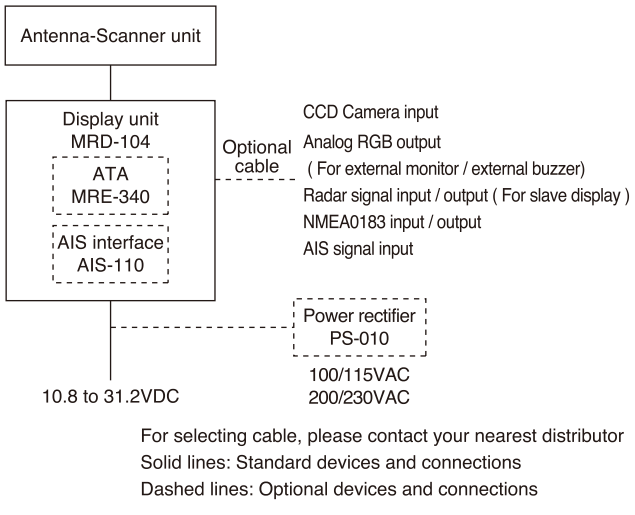

For selecting cable, please contact your nearest distributor
Solid lines: Standard devices and connections
Dashed lines: Optional devices and connections

EQUIPMENT LIST

Standard Equipment

Antenna-Scanner unit	RB715A	4 kW	MDC-2041
Scanner unit	RB716A	4 kW	MDC-2040
	RB717A	6 kW	MDC-2060
	RB718A	12 kW	MDC-2010
Antenna unit	RW701A-03	3 feet	MDC-2040
	RW701A-04	4 feet	MDC-2040/2060/2010
	RW701A-06	6 feet	MDC-2060/2010
Display unit	MRD-104	with hard cover	
Connecting cable	242J158055A-10M	10m	MDC-2041
	242J159098A-10M	10m	MDC-2040
	242J159098B-15M	15m	MDC-2060/2010
DC power cable	CW-259-2M	2 m	
Operation manual, Quick reference, Installation material, Spare parts			

Option

ATA, AIS interface, CCD camera cable, Gyro/Log interface, Power rectifier, AC power cable, Connecting cable for external monitor / external buzzer

DIMENSIONS AND WEIGHT

Display unit: unit: mm (inch)

MRD-104

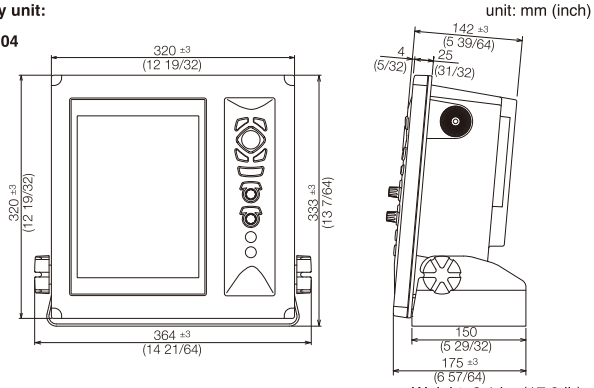

Weight: 8.1 kg (17.9 lb)

Antenna - Scanner unit:

RB715A

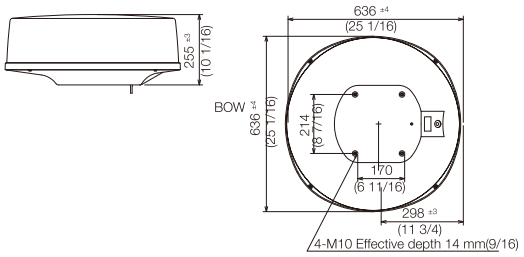

Weight: 10 kg (22.5 lb)

RB716A / RB717A / RB718A with RW701A-03/04/06

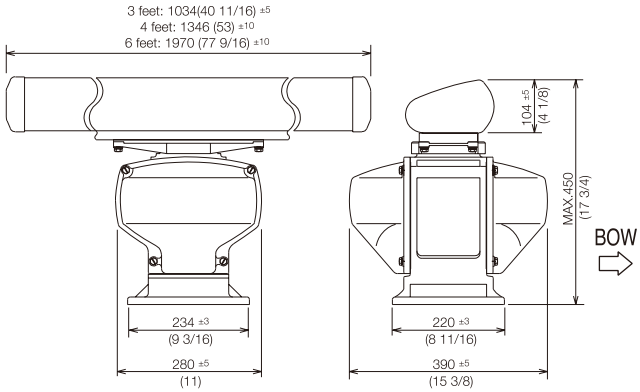

Weight: RB716A
3 feet: 21.5 kg (47 lb)
4 feet: 22.5 kg (50 lb)

Weight: RB717A / RB718A
4 feet: 23 kg (51 lb)
6 feet: 25 kg (56 lb)

• Design and specifications are subject to change without notice.

KODEN Koden Electronics Co., Ltd.

Tamagawa Office:
2-13-24 Tamagawa, Ota-ku, Tokyo, 146-0095 Japan
Tel: +81-3-3756-6501 Fax: +81-3-3756-6509
Uenohara Office:
5278 Uenohara, Uenohara-shi, Yamanashi, 409-0112 Japan
Tel: +81-554-20-5860 Fax: +81-554-20-5875

overseas@koden-electronics.co.jp

www.koden-electronics.co.jp

Safety precaution To ensure proper and safe use of the equipment, please carefully read and follow the instructions in the Operation Manual.

For details, please contact:

15-04, Printed in Japan

To ask about this model or to buy

Every sale is made direct, so you can talk it through first

Call

Michael McGlinn

0494 901 661

sales@westcoastmarineelectronics.com.au

https://westcoastmarineelectronics.com.au/

West Coast Marine Electronics, Fremantle, Western Australia

This page was added by West Coast Marine Electronics. The pages of this brochure are the maker's own and have not been changed. Makers change specifications from time to time, so please call to confirm before you rely on them.