KODEN

GPS / SBAS / Navigator

KGP-915



Features

- Bright 4.3-inch high-resolution Color LCD
- Quick Entry numeric keypad
- Waypoint memory 10,000 points
- Route memory 100 x 50 points
- Ship's trail point 3,000
- Total 6 display modes available
- Equipped with two NMEA-0183 data ports

< Screen Image >

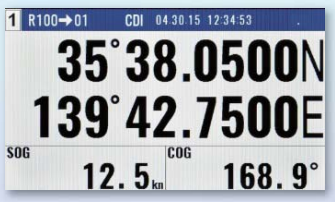

Nav data



Plotter

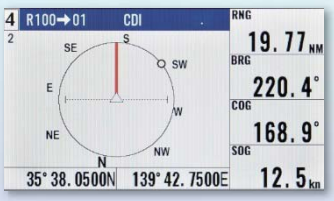

Navigation Graph



Highway

SPECIFICATIONS

Model		KGP-915
Receiving frequency		1575.42 MHz±1MHz, 1602MHz±4MHz
Receiving channel		72 channel parallel
Receiving code		C/A code
Sensitivity		Better than –148 dBm
Accuracy	Position	4.2 m 2drms(GNSS), 3.3 m 2drms(DGNSS)
	SOG	0.1 kt rms
HDOP≦4	COG	± 1.0°
Display size and type		4.3 inch color LCD (480×272, effective picture area: 95.04 x 53.86 mm)
Display mode		Nav data1, Nav data2, Nav data3, Navigation Graph, Highway, Plotter, POB (People Over Board)
Track display	Display range	0.025, 0.05, 0.1, 0.2, 0.5, 1, 2, 5, 10, 20 nm (sm, km)
	Usable ground	Within 80° in latitude
	Plotting interval	5, 10, 20, 30 seconds, 1 minutes, 0.01, 0.05, 0.1, 0.5, 1 nm (sm, km)
	Plotting capacity	3,000 points
Position data display		Latitude/longitude in increments of 0.0001 minute, Converted Loran C LOPs, Converted Loran A LOPs, Converted Decca LOPs,
Navigational display		Speed, Course, Distance / Bearing to waypoint, Cross track error, Time to go towaypoint, Total time to go and distance on route, DOP value, Present time (UTC or LTC), Satellite status, Beacon receiving status, Distance/Bearing betweentwo points, POB display
Instant (event) memory		1,000 points
Waypoint memory		10,000 points (9,000 + Event 1,000)
Route memory		100 routes reverse trail possible
Alarms		Proximity, Cross track error, CDI, Anchor watch
Position compensation		Latitude / longitude, LOPs, Datum
Magnetic compensation		Auto or Manual
Parameters		Loran C LOPs conversion, Loran A LOPs conversion, Decca LOPs conversion, Memory of waypoints and name (up to 10 letters), Selection of measuring unit (nm, sm, km), Averaging (smooth) factor, Position mode (2D or 3D automatic selection), Beacon stations selection
Output data format and sentences (DATA1/2 connector)		NMEA 0183 Ver.2.0 / 3.0 / 4.1 CIF (AAM, APB, BOD, BWC, DCN, DTM, GGA, GLC, GLL, GSA, GSV, MSS, RMB, RMC, RTE, VTG, WPL, XTE, ZDA)
Input data format		RTCM SC104 Ver.2.0 (DGNSS) , NMEA 0183 (GNSS source: External)
Power supply		10.8 to 31.2 V DC
Power consumption		4.5 W or less (24V DC)

Note: Accuracy is subject to change in accordance with DoD civil GNSS user policy.

Environmental

Operating temperature	Display unit:- 15 °C to + 55 °C Antenna unit: - 25 °C to + 55°C
Water protection	Display unit: IPX4 Antenna unit: IPX6

CONNECTIONS

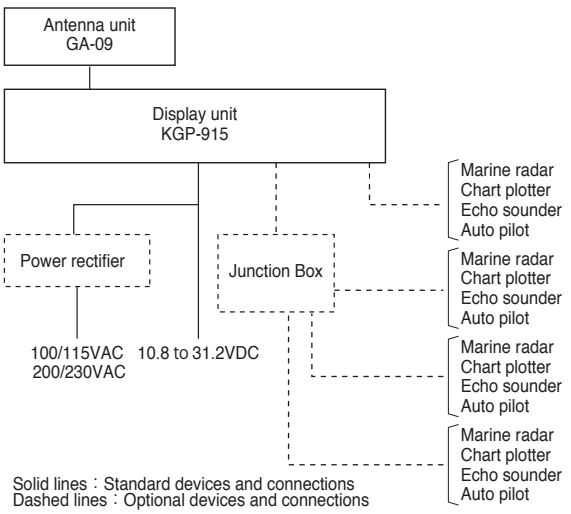

EQUIPMENT LIST

Standard Equipment

Display unit	KGP-915	With mounting bracket and hard cover
Antenna unit	GA-09[10M]	with 10m antenna cable and BNC connector
	GA-09[15M]	with 15m antenna cable and BNC connector
	GA-09[0.5M]	with 0.5m antenna cable for cable extension 30m / 60m and N-P connector
DC power cable	CW-276-2M	With 5-pin connector and one end plain (2m)
Operation Manual, Installation material		

Options

Connecting cable, Junction box, Power rectifier, AC power cable, Connector, Antenna cable extension kit, Conversion cable

DIMENSIONS AND WEIGHT

Unit: mm (inch)

Display Unit
KGP-915

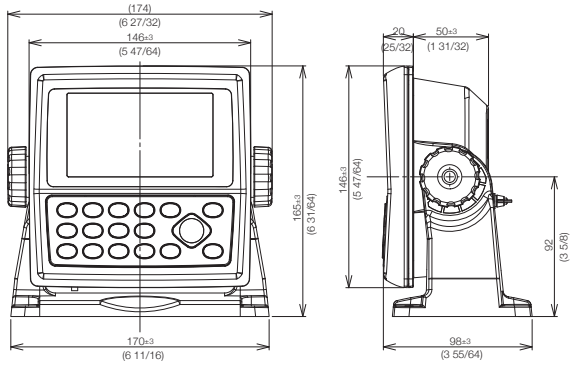

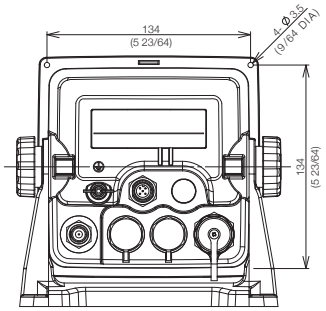

Weight : 0.93kg (2.1lb)

Antenna unit
GA-09

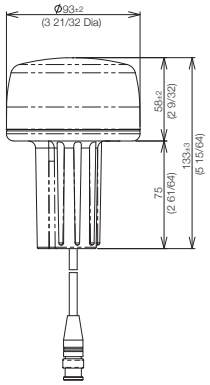

Weight : 0.23kg (0.51lb)

• Design and specifications are subject to change without notice.

KODEN Koden Electronics Co., Ltd.

Tokyo Office:
Kamata Tsukimura Bldg. 8F,
5-15-8 Kamata, Ota-ku, Tokyo, 144-0052 Japan
Tel: +81-3-6715-9286 Fax: +81-3-6715-9287
Uenohara Office:
5278 Uenohara, Uenohara-shi, Yamanashi, 409-0112 Japan
Tel: +81-554-20-5860 Fax: +81-554-20-5875

overseas@koden-electronics.co.jp

www.koden-electronics.co.jp

Safety precaution To ensure proper and safe use of the equipment, please carefully read and follow the instructions in the Operation Manual.

For details, please contact:

To ask about this model or to buy

Every sale is made direct, so you can talk it through first

Call

Michael McGlinn

0494 901 661

sales@westcoastmarineelectronics.com.au

https://westcoastmarineelectronics.com.au/

West Coast Marine Electronics, Fremantle, Western Australia

This page was added by West Coast Marine Electronics. The pages of this brochure are the maker's own and have not been changed.
Makers change specifications from time to time, so please call to confirm before you rely on them.