KODEN

Digital Searchlight Sonar

DIGITAL

KDS-5500BB

High sensitivity over long range!

80/140/180 kHz

Selectable Frequency at time of purchase

17 inch LCD monitor (optional)

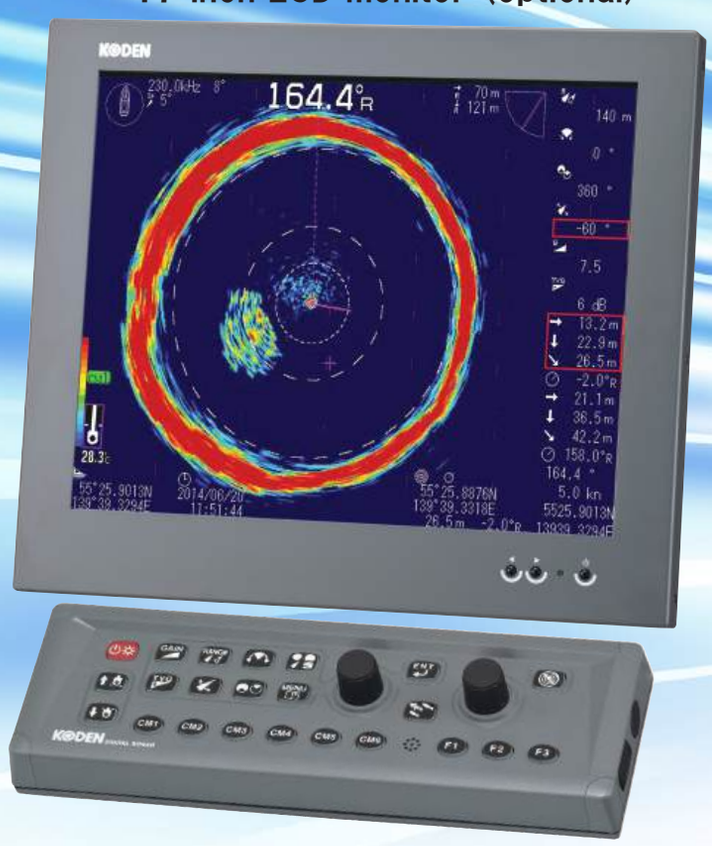

Black box type

High Sensitivity fixed frequency model KDS-5500BB

Image comparison of KDS-5500BB and Broadband sonar

Shallow water (100m)

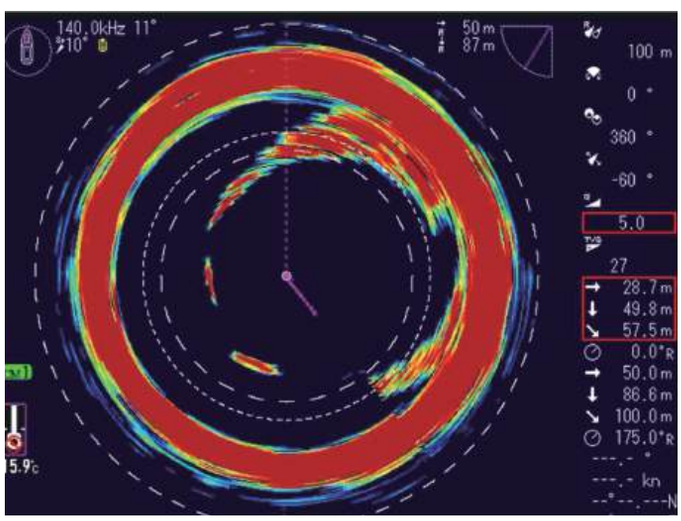

KDS-5500BB 140kHz

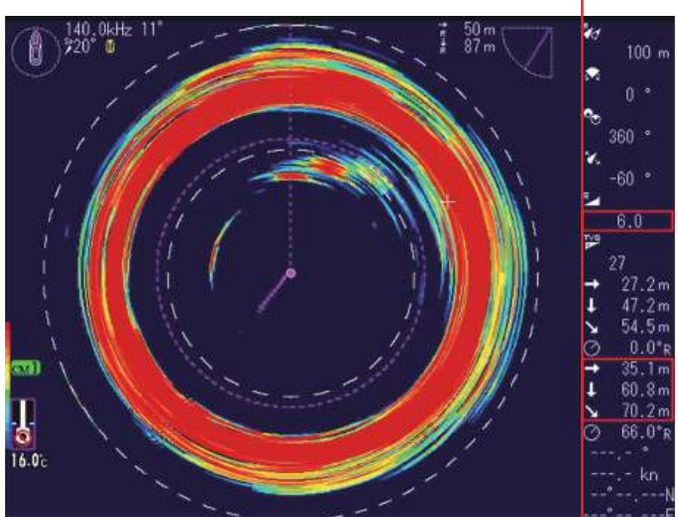

Broadband 140kHz

Deep water (550m)

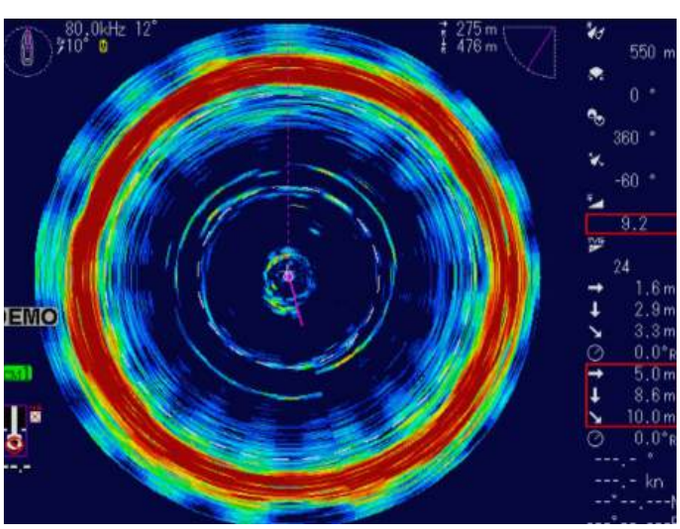

KDS-5500BB 80kHz

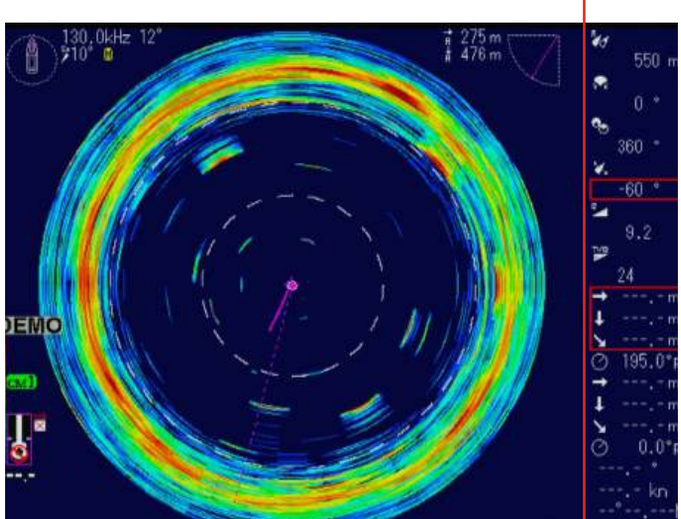

Broadband 130kHz

Recommended sonar selection

What fits you better?

▼ Target specific fish species and use only one frequency:

KDS-5500BB

▼ Using sonar for different fishing, different areas, different seasons:

Broadband Sonar

Featured option

Black box type



KDS-5500BB comes in black box. The user can select a monitor from the marker or the optional 17/19 inch LCD monitor.

Compact hull unit

Limited room for installation?

▼ Solved with a short hoist version, requires 13cm less room.

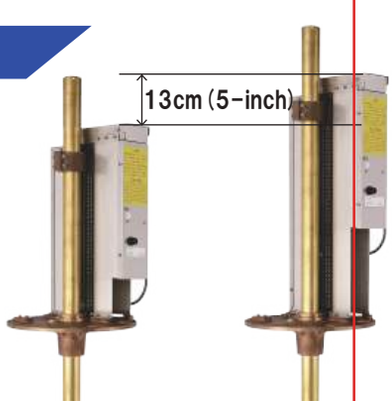

Short stroke　　Normal stroke

Screen image of KDS-5500BB/80kHz

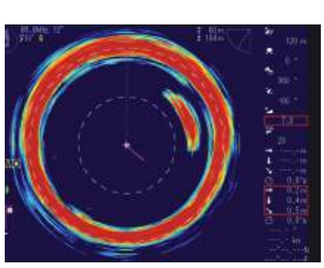

Sardine

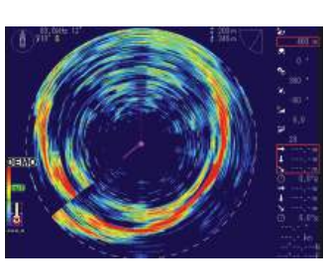

Red snapper

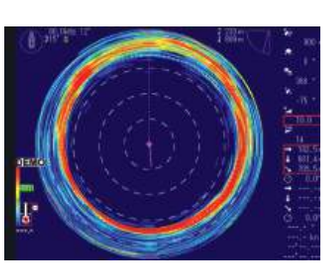

Depth 680m

SPECIFICATIONS

Model		KDS-5500BB										
Output power (RMS)		1.5 kW										
Output frequency		80 kHz , 140 kHz, 180kHz (Select at time of purchase)										
Tilt angle		5° to -90°(1°step)										
Beam angle		80 kHz : 19° / 140 kHz : 12° / 180 kHz : 10°										
TD stroke		150 to 380 mm (Recommended value150 mm)										
Display size and type		Any monitor with VGA resolution (Owner supplied)										
Basic ranges		10 to 1000 (m), 10 to 700 (l.fm), 30 to 3000 (ft), 10 to 600 (fm) (8 ranges can be set to users choice)										
Range units		m, fm, ft, l.fm										
Scanning sector angles	Sonar mode	5°step:5°, 25°, 45°, 85°, 125°, 165°, 205°, 360° 10°step:10°, 30°, 50°, 90°, 130°, 170°, 210°, 360° 15°step:15°, 45°, 75°, 105°, 135°, 165°, 225°, 360° 20°step:20°, 60°, 100°, 140°, 180°, 220°, 260°, 360°										
	Bottom scan mode	3°step:3°, 27°, 45°, 63°, 93°, 117°, 147°, 177° 5°step:5°, 25°, 45°, 65°, 95°, 115°, 145°, 175°										
360° Scannning time (extracts)	Scanning range(m)	20	40	60	80	100	120	160	180	200	240	400
	5° step	6.3	8	10	11.8	14	15.8	19.5	21.6	23.5	27.5	43.3
	10° step	3.7	4.7	5.6	6.5	7.6	8.6	10.6	11.5	12.5	14.4	22.4
	15° step	3.3	3.7	4.3	4.9	5.7	6.4	7.9	8.2	8.9	10.3	15.7
	20° step	3.3	3.4	3.8	4.2	4.8	5.2	6.4	6.6	7.3	8.1	12.2
Bearing center		1°step										
Presentation modes		Sonar, Off-center, Bottom scan, Echo sounder, 2 Mode Display, One line										
Off-Center		Fore, Back, Left, Right										
Target lock		Reverse, Horizontal, Horizontal + Vertical, Marker + Horizontal, Marker + Horizontal + Vertical										
Presentation colors		8 colors, 16 colors										
Functions		TVG , Color rejection, Dynamic range, Compass display, Pulse width, Output power control, Noise reduction, A-scope, CM key, Frequency bandwidth, Image correction, Bearing display, TD auto up, Sona-Tone™										
Language		English, Japanese, Korean, Spanish, Thai, Traditional Chines, Greek, Italian, Portuguese, Burmese										
Input data format and sentences		NMEA0183 GGA, GLL, HDG, HDM, HDT, RMC, THS, VTG, ZDA										
Output data format and sentences		NMEA0183 DBT, DPT, GGA, GLL, MTW, RMC, TLL, VTG, ZDA										
NMEA ports		Total 1 : input / output										
Power supply	Processor unit	10.8 to 31.2 VDC										
	Hull unit	10.8 to 31.2 VDC										
Power consumption	Processor unit	70 W or less (24 VDC)										
	Hull unit	70 W or less (24 VDC)										
Operating temperature		-15 ℃ to +55 ℃										
Water protection		-										

CONNECTIONS

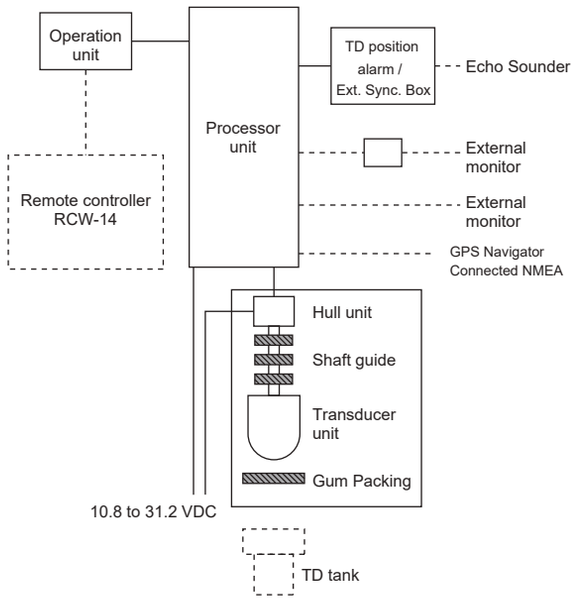

Solid lines : Standard devices and connections
Dashed lines : Optional devices and connections

EQUIPMENT LIST

Standard equipment	Processor unit	1
	Operation unit	1
	Hull unit (Normal stroke / Short stroke)	1
	Accessories for Processor unit	1
	Installation materials for Hull unit	1
	TD position alarm / Ext. Sync. Box	1
	DC power cable	1
	Operation manual, Installation manual, Quick Reference	1
Options	Remote controller, PVC TD tank, FRP TD tank, Shaft guide for FRP TD tank AC rectifier unit, Connecting cable, 17 inch LCD monitor	

DIMENSIONS AND WEIGHT

Processor unit
DPU-551

Unit:mm (inch)

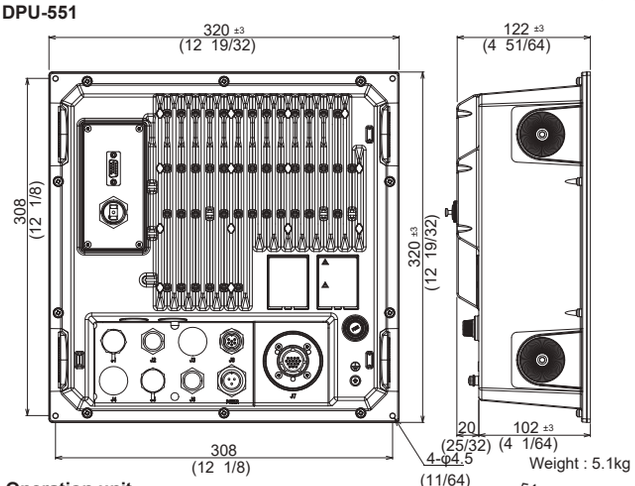

Weight : 5.1kg

Operation unit
DOU-620

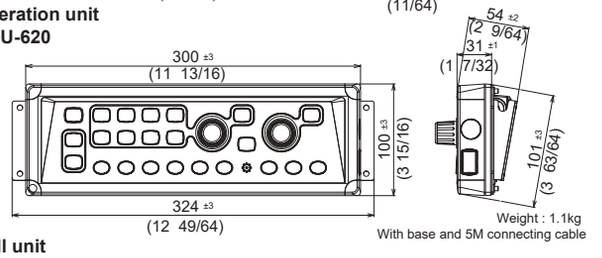

Weight : 1.1kg
With base and 5M connecting cable

Hull unit

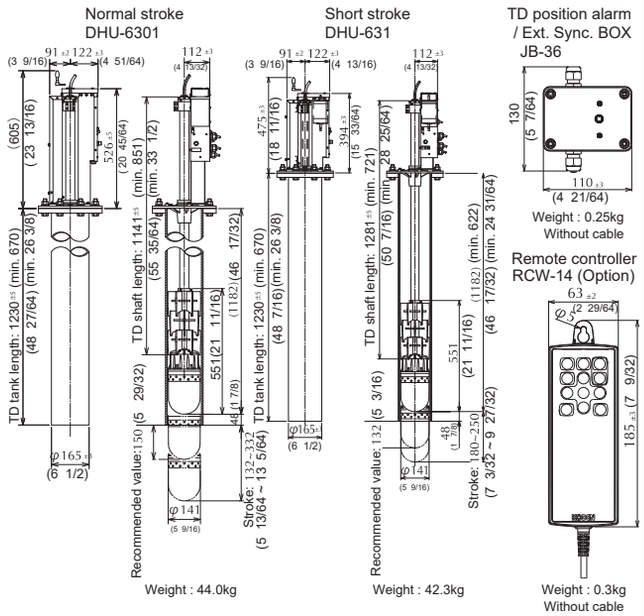

Weight : 44.0kg
Weight : 42.3kg
Weight : 0.25kg
Without cable
Weight : 0.3kg
Without cable

• Design and specifications are subject to change without notice.

KODEN Koden Electronics Co., Ltd.

Tokyo Office:
Kamata Tsukimura Bldg. 8F,
5-15-8 Kamata, Ota-ku, Tokyo, 144-0052 Japan
Tel: +81-3-6715-9286 Fax: +81-3-6715-9287
Uenohara Office:
5278 Uenohara, Uenohara-shi, Yamanashi, 409-0112 Japan
Tel: +81-554-20-5860 Fax: +81-554-20-5875

overseas@koden-electronics.co.jp

www.koden-electronics.co.jp

Safety precaution To ensure proper and safe use of the equipment, please carefully read and follow the instructions in the Operation Manual.

For details, please contact:

26-07 Printed in Japan

To ask about this model or to buy

Every sale is made direct, so you can talk it through first

Call

Michael McGlinn

0494 901 661

sales@westcoastmarineelectronics.com.au

https://westcoastmarineelectronics.com.au/

West Coast Marine Electronics, Fremantle, Western Australia

This page was added by West Coast Marine Electronics. The pages of this brochure are the maker's own and have not been changed. Makers change specifications from time to time, so please call to confirm before you rely on them.