KODEN

Digital Sonar

KDS-5000BB

DIGITAL

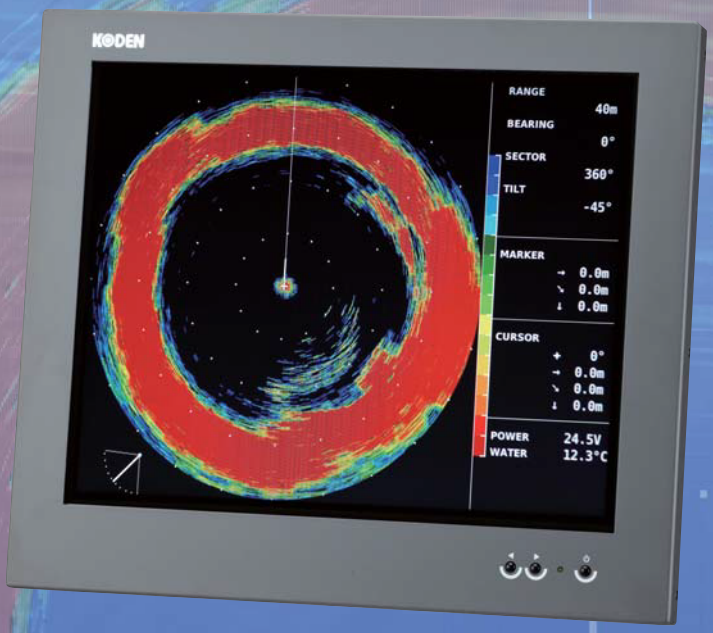

LCD Monitor Owner supply



Junction Box



Processor unit



Hull unit



Operation unit

Features

- ▶ DSP Technology (Resolution up by digital control)
- ▶ Space Saving Installation
- ▶ Black Box Type Sonar connect to any XGA type display (Owner supply)
- ▶ Easy Operation

SPECIFICATIONS

Model		KDS-5000BB										
Output power (RMS)		1.5 kW										
Output frequency		180 kHz										
Tilt angle		+5° to -90° (1°step)										
Beam angle		10°										
TD stroke		180 to 380 mm (Recommended value 180 mm)										
Display size and type		Any monitor with XGA resolution (Owner supplied)										
Display resolution		1024 x 768 (XGA)										
Basic ranges		8 ranges freely set										
Range units		Meters, Feet, Fathoms, Braccia can be selected										
Scanning sector angles	Sonar mode	5°step: 5°, 25°, 45°, 85°, 125°, 165°, 205°, 360° 10°step: 10°, 30°, 50°, 90°, 130°, 170°, 210°, 360° 15°step: 15°, 45°, 75°,105°, 135°, 165°, 225°, 360° 20°step: 20°, 60°,100°,140°, 180°, 220°, 260°, 360°										
	Bottom scan mode	3°step: 3°, 27°, 45°, 63°, 93°, 117°, 147°, 177° 5°step: 5°, 25°, 45°, 65°, 95°, 115°, 145°, 175°										
360° Scanning time (extracts)	Scanning range (m)	20	40	60	80	100	120	160	180	200	240	400
	Scanning time (sec.) 5° step	5.7	7.6	9.5	11.4	13.3	15.3	19.1	21.0	23.0	26.8	42.2
	Scanning time (sec.)10° step	4.1	5.0	6.0	7.0	8.0	8.9	10.8	11.8	12.7	14.7	22.3
	Scanning time (sec.)15° step	3.5	4.1	4.8	5.4	6.1	6.7	8.0	8.6	9.3	10.6	15.7
	Scanning time (sec.)20° step	3.2	3.7	4.2	4.6	5.1	5.6	6.6	7.1	7.5	8.5	12.3
Bearing center		every 5°step selectable										
Presentation modes		Sonar mode + Data display, Off-center mode + Data display Off-center on the whole screen, Bottom scan mode + Data display, Sounder Mode + Data display										
Data display		Secter center angle, Tilt angle, Tilt angle indicator, Ring marker, Cross Cursor Compass (option), Navigation (option)										
Off-Center		Fore, Back, Left, Right										
Target lock		Reverse, Horizontal, Horizontal + vertical, Marker + Horizontal										
Presentation colors		8/16 colors										
Functions		Operation mode (3 modes), Off-center (4 changes), Train correct, Power rejection Gain adjust, Temperature adjust, Pulse width control, TVG change, Target lock Color change (4 types + 2 types of color palette settings), Dynamic range Interference rejection, Color rejection, Filter (OFF/1/2), Gain control, Far gain control External trigger synchronization, Trigger signal output Hoist sensor lamp, Audio (optional speaker required), Stabilizer (up to 25°controllable) Transducer unit automatic retract (Navigator connect required), Full-screen gain control										
Language		English, Japanese										
External Input		Trigger input, Navigator input, External sounder input, Remote controller input										
External Output		External buzzer, Trigger output, NMEA output, XGA output, Audio output USB terminal (memory for setting values)										
NMEA ports		Total 1 : input / output										
Power supply	Processor unit	21.6 to 31.2 VDC										
	Hull / lower unit	21.6 to 31.2 VDC										
Power consumption	Processor unit	70 W or less (24 VDC)										
	Hull / lower unit	70 W or less (24 VDC)										
Operating temperature		-15 °C to + 55 °C										
Water protection		-										

CONNECTIONS

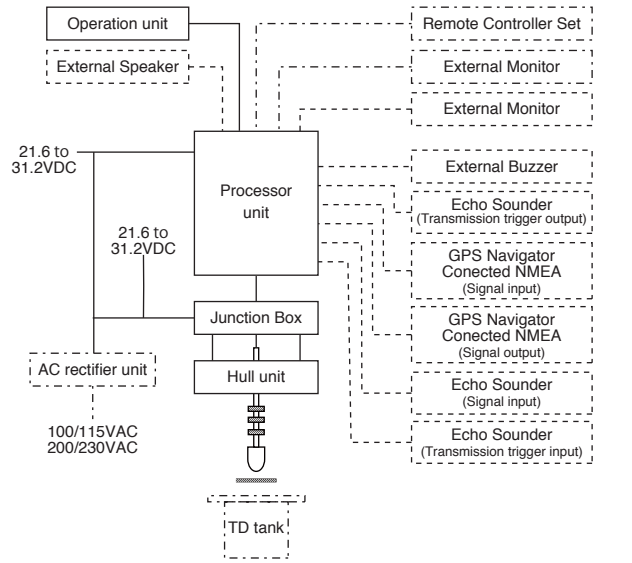

EQUIPMENT LIST

Standard equipment	Processor unit	1
	Operation unit	1
	Hull unit	1
	Junction box	1
	Accessories for Processor unit	1
	Installation materials for Hull unit	1
	Accessories for Junction box	1
	DC power cable	1
	Communication cable	1
	Operation manual	1

Options	Remote Controller Set, XGA Connect Cable Assy, Trigger Output Cable, Junction Box Mounting Kit, TD tank, TD shaft, Shaft guides, Shaft guides with adjuster, Grease, AC rectifier unit, AC power cable

DIMENSIONS AND WEIGHT

unit: mm (inch)

Processor unit

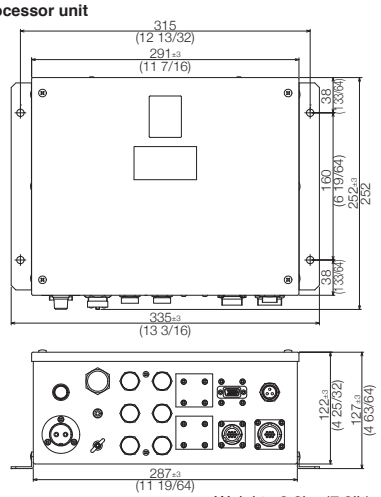

Weight : 3.3kg (7.3lb)

Hull unit

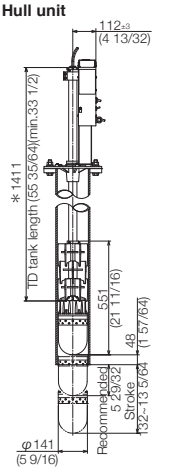

Weight : 33kg (73lb)

Operation unit

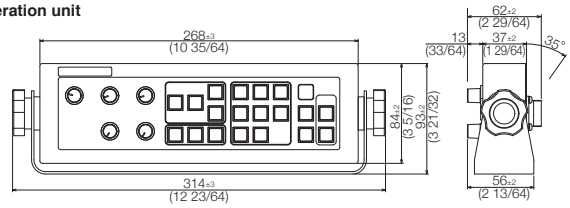

Weight : 1.1kg (2.5lb)
(Inclusive base)

Junction Box

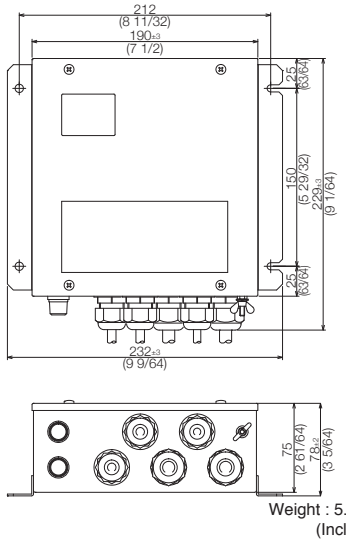

Weight : 5.2kg (11.5lb)
(Inclusive cable)

• Design and specifications are subject to change without notice.

KODEN Koden Electronics Co., Ltd.

Tamagawa Office:
2-13-24 Tamagawa, Ota-ku, Tokyo, 146-0095 Japan
Tel: +81-3-3756-6501 Fax: +81-3-3756-6509
Uenohara Office:
5278 Uenohara, Uenohara-shi, Yamanashi, 409-0112 Japan
Tel: +81-554-20-5860 Fax: +81-554-20-5875

overseas@koden-electronics.co.jp

www.koden-electronics.co.jp

Safety precaution To ensure proper and safe use of the equipment, please carefully read and follow the instructions in the Operation Manual.

For details, please contact:

17-11 Printed in Japan

To ask about this model or to buy

Every sale is made direct, so you can talk it through first

Call

Michael McGlinn

0494 901 661

sales@westcoastmarineelectronics.com.au

https://westcoastmarineelectronics.com.au/

West Coast Marine Electronics, Fremantle, Western Australia

This page was added by West Coast Marine Electronics. The pages of this brochure are the maker's own and have not been changed. Makers change specifications from time to time, so please call to confirm before you rely on them.