KODEN

GNSS Compass

KC-2000

Smaller and Smarter multi GNSS compass system



Features

- Compact type for space saving installation
- Compatible with GPS / QZSS, Galileo, BeiDou, GLONASS
- Highly accurate heading, position, speed, rolling, pitching and heaving data
- SBAS (MSAS / WAAS / EGNOS) enabled
- Built-in high-precision gyro sensor for backup

SPECIFICATIONS

Model	KC-2000		
Receiving frequency	1575.4200 MHz / 1561.0980 MHz / 1602.5625 MHz		
Receiving channel	72 channels		
Received signal	GPS QZSS Galileo SBAS	1575.4200 MHz	L1 C/A L1C/A, L1S E1 B/C L1 C/A
	BeiDou	1561.0980 MHz	B1
	GLONASS	1602.5625 MHz	L1 OF
Sensitivity	-148 dBm or less		
Setting time	90 seconds or less (standard)		
Time to position fix	50 seconds or less (standard)		
Accuracy Heading	1.5° rms or less		
Position	GPS: 10m (2 drms, SA: OFF, PDOP: 3 or less) SBAS: 3m (2 drms, SA: OFF, PDOP: 3 or less)		
Velocity	0.1 m / sec (rms, SA: OFF, PDOP: 3 or less)		
Heading resolution	0.1°		
Maximum rate of turn	45° / sec		
Maximum role/pitch angle	30°		
Maximum follow-up acceleration	1 G		
Base line length	0.2 m		
Output data format and sentences	NMEA 0183 Ver.2.0, NMEA 0183 Ver.1.5, IEC 61162-1ed5 ATT, DTM, GBS, GGA, GLL, GNS, GSA, GSV, HDM, HDT, HVE, RMC, ROT, THS, VTG, ZDA, PKODG21, ALC, HBT		
Power supply	10.8 to 31.2 VDC		
Power consumption (24 VDC)	12W or less		

Environmental

Operating temperature	-25°C to +55°C
Water protection	IPX6

CONNECTIONS

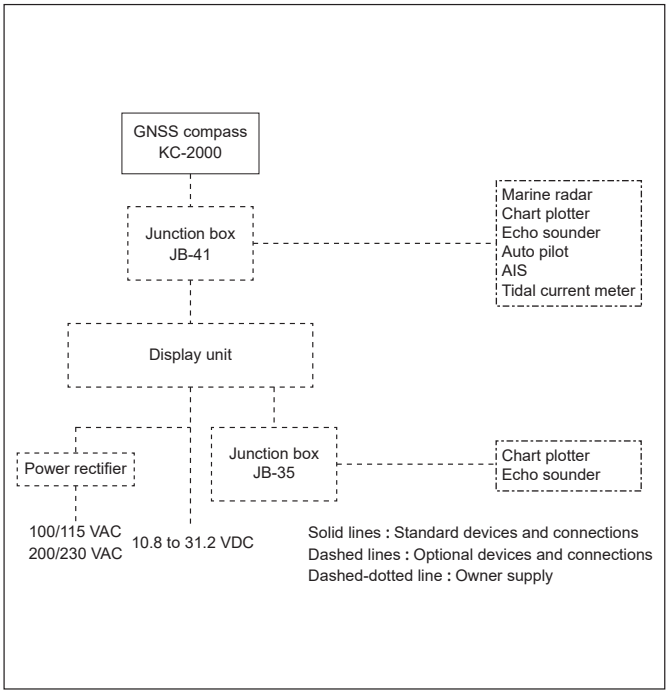

EQUIPMENT LIST

Standard Equipment

GNSS compass	KC-2000	
NMEA cable	CW-431-15M	12-pin water resistant connector and one end plain
Installation Manual, Installation material		

Option

Connecting cable, Display unit, Junction box, Power rectifier, Mount base

DIMENSIONS AND WEIGHT

Unit : mm (inch)

GNSS compass
KC-2000

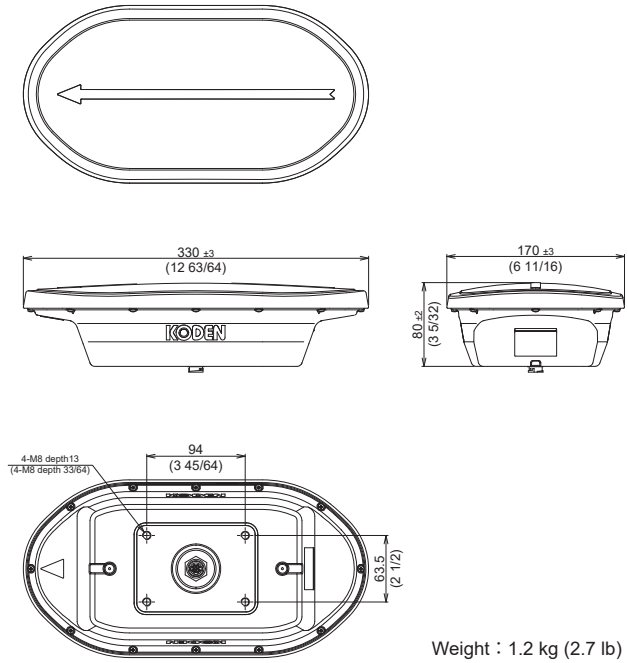

Weight : 1.2 kg (2.7 lb)

• Design and specifications are subject to change without notice.

KODEN Koden Electronics Co., Ltd.

Tokyo Office:
Kamata Tsukimura Bldg. 8F,
5-15-8 Kamata, Ota-ku, Tokyo, 144-0052 Japan
Tel: +81-3-6715-9286 Fax: +81-3-6715-9287
Uenohara Office:
5278 Uenohara, Uenohara-shi, Yamanashi, 409-0112 Japan
Tel: +81-554-20-5860 Fax: +81-554-20-5875

overseas@koden-electronics.co.jp

www.koden-electronics.co.jp

Safety precaution To ensure proper and safe use of the equipment, please carefully read and follow the instructions in the Operation Manual.

For details, please contact:

25-05, Printed in Japan

To ask about this model or to buy

Every sale is made direct, so you can talk it through first

Call

Michael McGlinn

0494 901 661

sales@westcoastmarineelectronics.com.au

https://westcoastmarineelectronics.com.au/

West Coast Marine Electronics, Fremantle, Western Australia

This page was added by West Coast Marine Electronics. The pages of this brochure are the maker's own and have not been changed. Makers change specifications from time to time, so please call to confirm before you rely on them.