KODEN

Chart Plotter

GTD-120

SAFETY-ACCURACY-RELIABILITY



Features

- 10.4 inch High brightness LCD
- User-friendly Operation
- Various display screen such as Bird view and dual range display
- SD card capable, save user data such as marks, tracks and settings
- Various marks and greater numbers of ship's tracks
- Useful information display in the information window on the screen
- AIS display function
- C-Map MAX chart Ready (Chart: Owner supplied)

10.4 inch color LCD GTD-120

Features



High performance LCD ensures high visibility under all conditions

- Adoption of special filter (AR coat). The image is clearly displayed in sunlight, and reflection on the LCD screen is also prevented.



Save important data in your SD card

- The display unit has “memory” inside, and data of mark, own track, draw, target track, route, picture and setting can be saved in the “memory” at any time. It is recommended to save important data in this “memory” to SD card. Data can be saved and imported between the “memory” and the SD card.
- Supports SD card sizes between 2 and 8GB.



User-friendly operation

- Easy to operate by using both single function keys and knobs, you can quickly learn how to operate.
- [F1] and [F2] keys are to call registered functions with one touch.

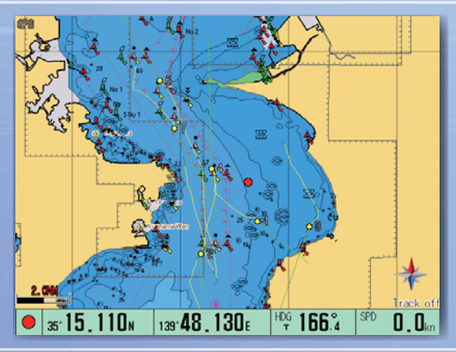

Other ship’s track display

- You can track a target when the track data is provided from a radar as other ship’s track data. You can display other ship’s track of up to 100 targets and set other ship’s shape, color, track record number and so on.

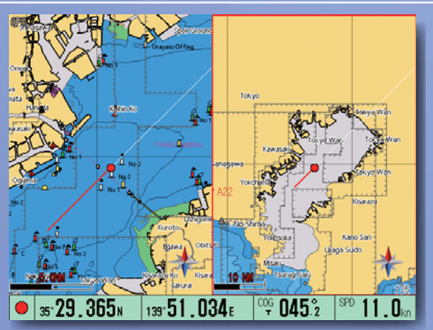

Short range display Long range display

Dual range display

- Ability to display two different ranges on one screen.
- You can choose two different scales at the same time by setting the plotter screen side by side.



Various information windows

- You can display maximum two information windows at upper right side on the screen.
- You can choose and configure useful information from 18 types such as AIS, Remaining route and water depth / water temperature.

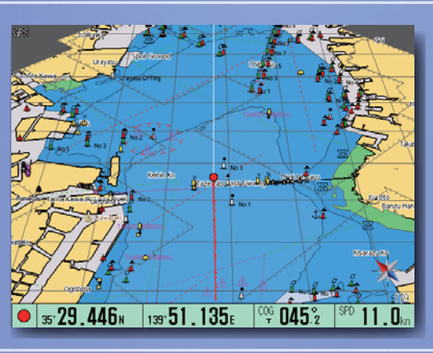

Available Bird view display

- Bird view screen is an elevated view of an object from above. It shows the direction of heading while showing the details of the position of own ship, so it is easy navigate while checking the direction of the waypoint.

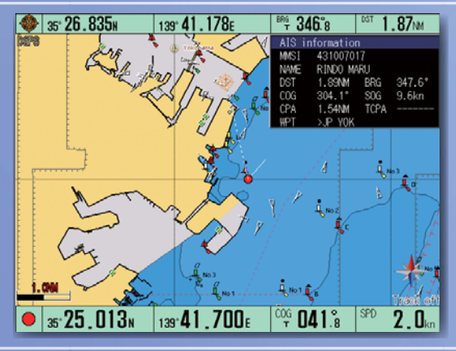

AIS display function

- By connecting to AIS receiver, AIS symbols will be displayed on the screen. Up to 128 AIS symbols can be displayed.
- Built in AIS interface board, display other ship information by connecting the AIS receiver.

SPECIFICATIONS

Display unit		GTD-120
Display size and type		10.4 inch color TFT LCD
Map mode		Mercator projection
Presentation modes		North-up, South-up, East-up, West-up, Course-up (Waypoint), Head-up
Display resolution		480×640 (VGA)
Zooming range		0.01 to 1,000 NM (or 0.02 to 2,000 km)
Effective map creation area		Below the latitude 80 degree
Plotting interval	Time	1, 2, 5, 10, 20, 30, 60, 120, 300, 600 sec
	Distance	0.01, 0.02, 0.05, 0.1, 0.2, 0.5, 1.0, 2.0, 5.0, 10.0 NM / km
Number of plots		2,000 / 4,000 / 5,000 / 7,000 / 10,000 / 20,000 points (Upper limit points can be selectable from 6 types) + saved track 20,000 points × 10 blocks
Track color		7 colors
Position data display		Lat / Lon, Loran C LOP
Navigational data display		Own ship's position, Own ship's course, Own ship's speed, Waypoint position, Waypoint bearing, Waypoint distance, POB position, POB bearing, POB distance, Cursor position, Cursor bearing, Cursor distance
Position registration		15,000 points × 6 blocks + Marked line 15,000 points (All points can be registered as waypoint)
Mark color		7 colors
Mark shape		
Drawing	Nodes	500 point × 20 blocks
	Color	7 colors
Alarm		Arrival, POB, Cross track error, CPA / TCPA, Area, Drawing, Ship's speed, Depth limit, Grounding
Positional correction		By cursor or by Lat / Lon or LOP data
Magnetic compass correction		Auto / Manual
Languages		English, Japanese, Korean, Spanish, Portuguese, Thai, Italian
Input data formats and sentences		NMEA0183 Ver.1.5 / 2.0 / 3.0 DBS, DBT, DPT, GGA, GLL, HDG, HDT, MSK, MTW, MWD, MWV, RMC, THS, TLL, TTM, VTG, ZDA
Output data formats and sentences		NMEA0183 Ver.2.0 GGA, GLL, GTD, HDT, VTG, ZDA, APB, BOD, BWC, RMB, RMC, WPL, XTE
NMEA ports		Total 5: input / output 4, input (GPS) 1
Data output cycle		1 sec
Power supply		10.8 to 31.2 VDC
Power consumption (24 VDC)		25W or less

Environmental

Operating temperature	-15°C to +55°C
Water Protection	IPX5

CONNECTIONS

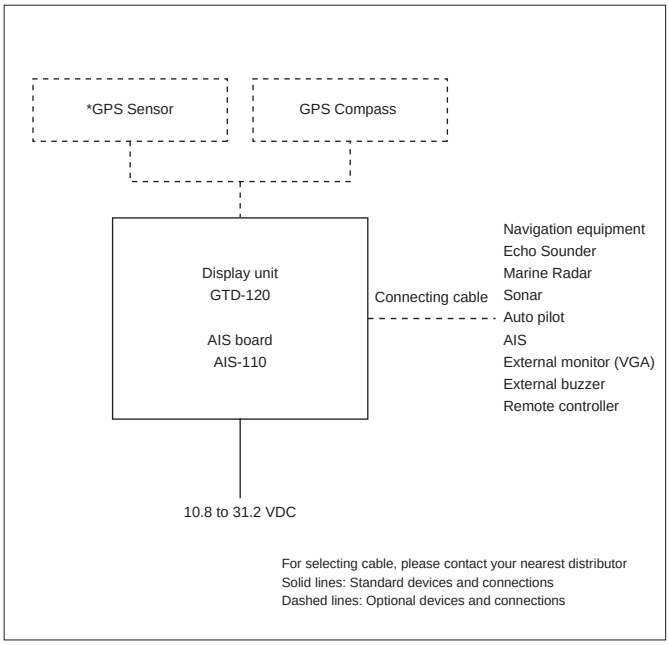

* For European model, please contact your nearest distributor.

EQUIPMENT LIST

Standard equipment	Display unit	1 set
	DC power cable	1 set
	Spare parts	1 set
	Operation manual	1 set
	Quick reference	1 set
Options	*GPS sensor, GPS compass, GPS antenna support holder, Remote controller, Various connection cables, Power rectifier	

* For European model, please contact your nearest distributor.

DIMENSIONS AND WEIGHT

Display unit:
GTD-120

Unit: mm (inch)

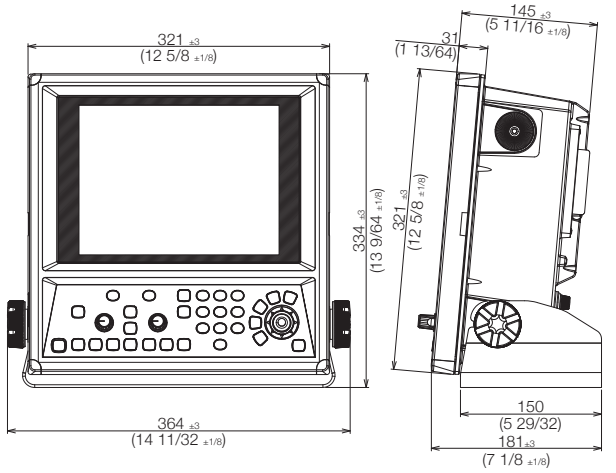

Weight：8.0 kg (17.7lb)(inclusive base)

• Design and specifications are subject to change without notice.

KODEN Koden Electronics Co., Ltd.

Tamagawa Office:
2-13-24 Tamagawa, Ota-ku, Tokyo, 146-0095 Japan
Tel: +81-3-3756-6501 Fax: +81-3-3756-6509
Uenohara Office:
5278 Uenohara, Uenohara-shi, Yamanashi, 409-0112 Japan
Tel: +81-554-20-5860 Fax: +81-554-20-5875

overseas@koden-electronics.co.jp

www.koden-electronics.co.jp

Safety precaution To ensure proper and safe use of the equipment, please carefully read and follow the instructions in the Operation Manual.

For details, please contact:

18-07 Printed in Japan

To ask about this model or to buy

Every sale is made direct, so you can talk it through first

Call

Michael McGlinn

0494 901 661

sales@westcoastmarineelectronics.com.au

https://westcoastmarineelectronics.com.au/

West Coast Marine Electronics, Fremantle, Western Australia

This page was added by West Coast Marine Electronics. The pages of this brochure are the maker's own and have not been changed. Makers change specifications from time to time, so please call to confirm before you rely on them.