12.1,15,17-inch Color LCD
Echo Sounder

CVS-702D/705D/707D

DIGITAL High power

The best suited Echo Sounder for professional boat

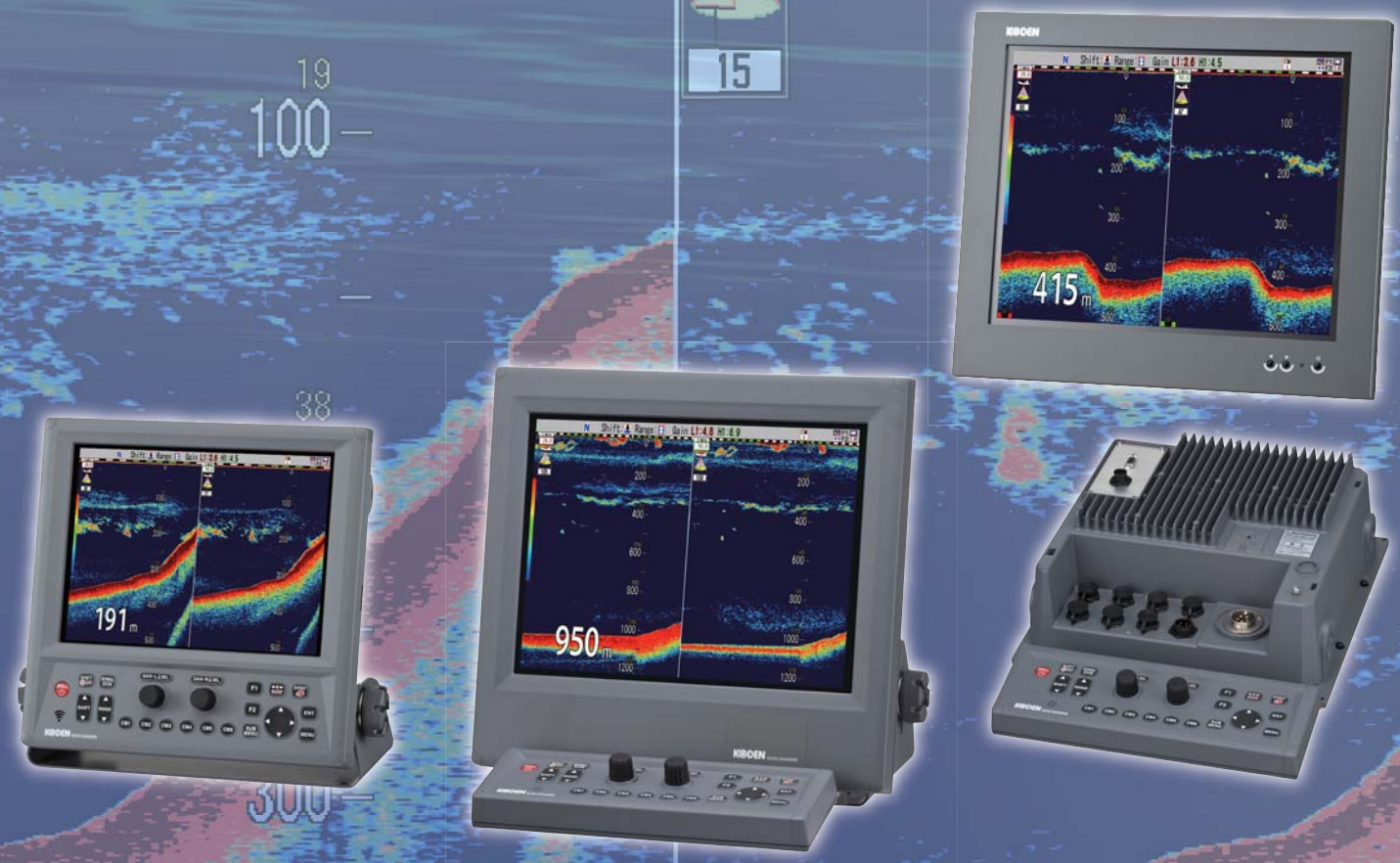

CVS-702D CVS-705D CVS-707D

Features

Optimized for deep water

Condition Memory for your preferred settings

Extremely high resolution and low noise

Bright and clear screen images by Koden Digital Filtering (KDF$_{TM}$) technology.

SPECIFICATIONS

Model	CVS-702D	CVS-705D	CVS-707D
Display unit	CVS-702D	ESD-210	17-inch LCD monitor
Processor unit	-	-	ESM-210
Oparation unit	-	ESO-200	
Output power (RMS)	3kW, 5kW		
Output frequency (Transducer)	Dual Freq : 28,50,75,200 kHz (200 kHz is 1 kw only)		
Output method	Single, 2 frequency, Simultaneous		
Display size and type	12.1 - inch color XGA LCD	15 - inch color XGA LCD	17 - inch color XGA LCD *****
Display resolution	1024 × 768 pixels （XGA）		
Basic range	1 to 3000 (m), 5 to 8000 (ft), 1 to 1700 (fm), 1 to 2000 (l. fm) (8 ranges can be set to users choice)		
Zoom range	1 to 260 (m), 5 to 960 (ft), 1 to140 (fm), 1 to 180 (l. fm))		
Range unit	m, ft, fm, l.fm		
Shift step	Selectable: Numerical value, Range ratio1/5, Registered value (8 type), Shift digit input, Range dependent		
Presentation modes	High frequency, Low frequency, 1 to 2 frequency, Zoom image (Bottom lock, Bottom discrimination, Bottom zoom, Zoom, Bottom follow zoom), Nav mode, Vertical split, Horizontal split, Mix A-scope can be displayed at all above modes		
Presentation colors	64 colors,16 colors, 8 colors, Monochrome		
Back ground colors	Marine blue, Blue, Dark blue, Black, White, Night mode, Other 4 colors		
Alarms	Bottom, Fish, Temperature*, Speed**, Arrival***, XTE***		
Image speed	12 steps & stop		
Functions	Interference rejection, Color rejection, VRM, Noise reduction, White line, Draft correct, Water temperature correct, Boat speed correct, Store image (500 images), Sona-Tone™, Homing, Fishing hot spot, Event memory, Simple plotter, Panel illumination, Power reduction, External trigger, Detection area display, CM key, Water Temp. graph, Individual range operation, Individual shift operation, Heaving compensation		
Auto functions	Range, Shift, TVG, TX Power, White Line		
Language	Simplified Chinese, Traditional Chinese, English, French, Greek, Italian, Japanese, Korean, Spanish, Thai, Danish		
Input data formats and sentences	NMEA0183 Ver.1.5 / 2.0 / 3.0 GGA, GLL, HDT, MTW, MWV, MWD, RMC, VHW, VTG, ZDA, **HEV, HPR, PFECHVE, PFECATT, PKODG21**		
Output data formats and sentences	NMEA0183 Ver.2.0 / 3 0(DBT : Ver.1.5) DBT, DPT, GGA, GLL, HDT, MTW, MWV, RMC, TLL, VHW, VTG, ZDA , **PKODS4, Olex, Nobeltec**		
NMEA ports	Total 2: input and output		
Power supply	10.8 to 31.2 VDC	21.6 to 31.2 VDC	21.6 to 31.2 VDC
Power consumption(24 VDC)	60 W or less	70 W or less	50 W or less without Display
Environmental			
Operating temperature	-15°C to +55°C		
Water protection	IPX5	IPX5 (Display unit, Operation unit)	IPX5 (Operation unit), IPX0 (Processor unit)

* Requires data from Temp sensor
** Requires speed data from Speed sensor or GPS sensor
*** Requires data from GPS sensor
**** Installed single frequency transducer of 50 and 200 kHz can be also used. For details, please contact your nearest distributor.
***** For European model, please contact your nearest distributor.

CONNECTIONS

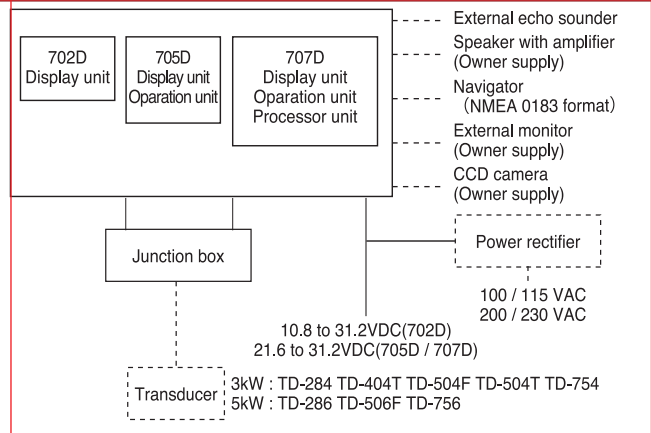

EQUIPMENT LIST

Standard equipment	CVS-702D	Display unit with mounting bracket	1
	CVS-705D	Display unit with mounting bracket	1
		Operation unit	1
	CVS-707D	Display unit with mounting bracket	1
		Processor unit	1
		Operation unit	1
	DC power cable, Junction box, Spare parts,		1
	Operation manual, Installation manual, Quick reference		1
Essential option	Transducer		
Options	Connection cables for external devices, Power rectifier		

DIMENSIONS AND WEIGHT

Unit: mm (inch)

Display Unit
CVS-702D

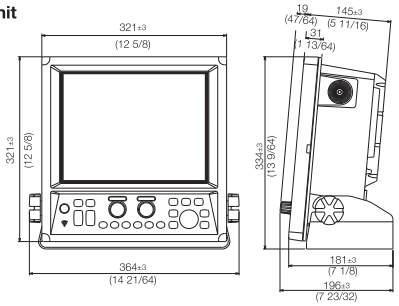

Weight : 9.1kg (20.1lb)

Display Unit
ESD-210(CVS-705D)

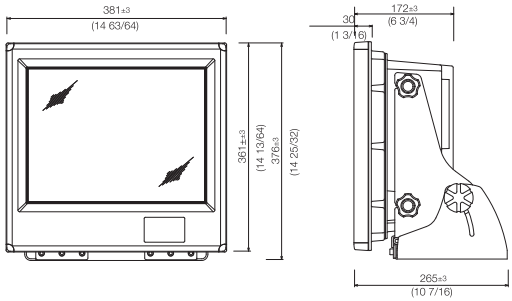

Weight : 13kg (29lb)

Processor Unit
ESM-210(CVS-707D)

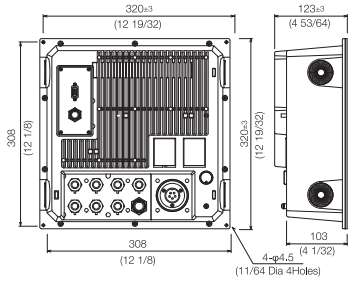

Weight : 5.6kg (12.5lb)

Operation Unit
ESO-200(CVS-705D/707D)

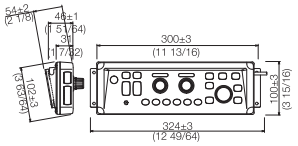

Weight : 0.7kg (1.55lb)

Display Unit
17 - inch LCD monitor (CVS-707D)

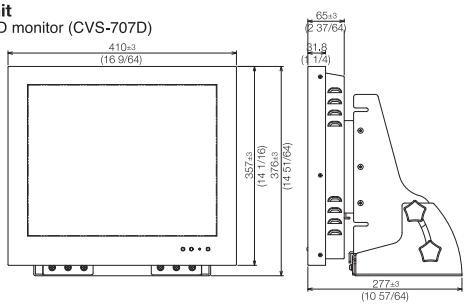

Weight : 7kg (15.5 lb)

• Design and specifications are subject to change without notice.

KODEN Koden Electronics Co., Ltd.

Tamagawa Office:
2-13-24 Tamagawa, Ota-ku, Tokyo, 146-0095 Japan
Tel: +81-3-3756-6501 Fax: +81-3-3756-6509
Uenohara Office:
5278 Uenohara, Uenohara-shi, Yamanashi, 409-0112 Japan
Tel: +81-554-20-5860 Fax: +81-554-20-5875

overseas@koden-electronics.co.jp

www.koden-electronics.co.jp

Safety precaution To ensure proper and safe use of the equipment, please carefully read and follow the instructions in the Operation Manual.

For details, please contact:

22-12, Printed in Japan

To ask about this model or to buy

Every sale is made direct, so you can talk it through first

Call

Michael McGlinn

0494 901 661

sales@westcoastmarineelectronics.com.au

https://westcoastmarineelectronics.com.au/

West Coast Marine Electronics, Fremantle, Western Australia

This page was added by West Coast Marine Electronics. The pages of this brochure are the maker's own and have not been changed. Makers change specifications from time to time, so please call to confirm before you rely on them.