SPECIFICATIONS

Model	CVS-126	CVS-128
Output power (RMS)	600 W	600W or 1kW
Output frequency	50 kHz and 200 kHz	
Output method	Single or Alternate	
Display size and type	5.7 inch color TFT LCD	8.4 inch color TFT LCD
Display resolution	320 x 240 pixels (QVGA)	640 x 480 pixels (VGA)
Basic range	2.5 to 800 (m), 10 to 2800 (ft), 2.5 to 600 (fm / l. fm) (8 ranges can be set to users choice)	2.5 to 1200 (m), 10 to 3600 (ft), 2.5 to 700 (fm / l. fm) (8 ranges can be set to users choice)
Zoom range	2.5 to 200 (m), 10 to 650 (ft), 2.5 to 150 (fm / l. fm)	
Range unit	m, ft, fm, l. fm	
Shift step	1m, 10m, 1/8, 1/4	
Presentation modes	High frequency, Low frequency, Dual frequency, Zoom image (Bottom lock, Bottom discrimination, Bottom zoom, Zoom, Bottom follow zoom), Nav mode, Vertical split, Horizontal split, A-scope can be displayed at all above modes	
Presentation colors	64 colors, 16 colors, 8 colors, Monochrome	
Back ground color	Marine blue, Blue, Black, White, Nighttime color, Other 5 colors	
Alarms	Bottom, Fish, Temperature *, Speed**, Arrival***, XTE ***	
Image speed	9 steps & stop	
Functions	Interference rejection, Color rejection, VRM, Noise rejection, White line, Draft correct, Water temperature correct, Boat speed correct, Store image (10 images), Sona-Tone™, Fishing Hot Spot, Event memory, Simple plotter, Panel illumination, Power reduction, Fish information, Detection area display etc.	
Auto functions	Range, Shift, Gain	
Language	Traditional Chinese, English, French, Greek, Italian, Japanese, Korean, Spanish, Thai, Danish, (Simplified Chinese CVS-128 only)	
Input data format and sentences	NMEA0183 Ver.1.5 / 2.0 / 3.0	
	GGA, GLL, HDT, MTW, MWV, RMC, VHW, VTG, ZDA	
Output data format and sentences	NMEA0183 Ver.2.0 (DBT: Ver.1.5)	
	DBT, DPT, GGA, GLL, HDT, MTW, MWV, RMC, TLL, VHW, VTG, ZDA	
NMEA port(s)	Total 1 : input and output	
Power supply	10.8 to 31.2 V DC	
Power consumption	10 W or less (12V DC)	25 W or less (12V DC)

Environmental

Operating temperature	-15°C to +55°C
Water protection	IPX5

* Requires data from Temp sensor
** Requires speed data from Speed sensor or GPS sensor
*** Requires data from GPS sensor

CONNECTIONS

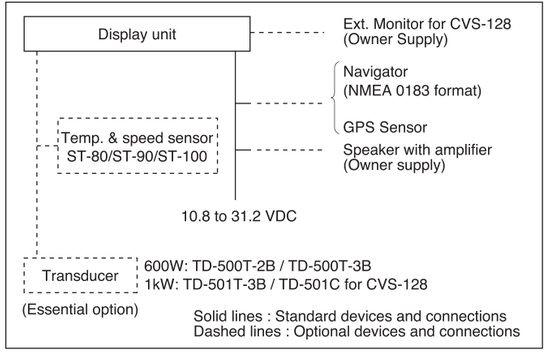

EQUIPMENT LIST

Standard equipment	Display unit with hard cover, Mounting bracket	1 set
	DC power cable, Spare parts, Operation manual, Quick reference	1 set
Essential option	Transducer	
Options	Temp. & speed sensor, Connection cables for external devices, Inner-hull kit, GPS Sensor	

DIMENSIONS AND WEIGHT

Unit: mm (inch)

CVS-126

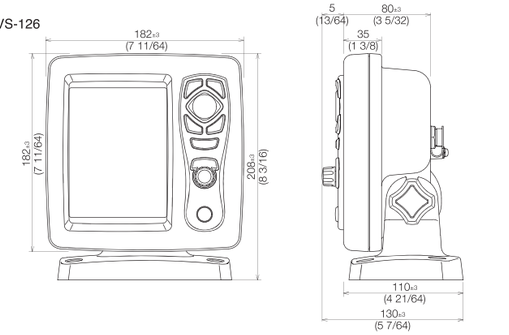

Weight : 1.3 kg (2.87 lb)

CVS-128

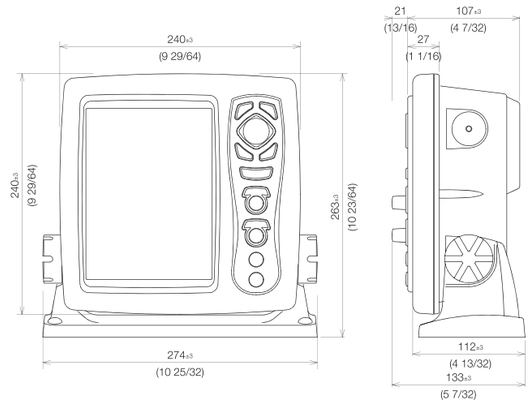

Weight : 3.2 kg (7.2 lb)

• Design and specifications are subject to change without notice.

KODEN Koden Electronics Co., Ltd.

Tamagawa Office:
2-13-24 Tamagawa, Ota-ku, Tokyo, 146-0095 Japan
Tel: +81-3-3756-6501 Fax: +81-3-3756-6509
Uenohara Office:
5278 Uenohara, Uenohara-shi, Yamanashi, 409-0112 Japan
Tel: +81-554-20-5860 Fax: +81-554-20-5875

overseas@koden-electronics.co.jp

www.koden-electronics.co.jp

Safety precaution | To ensure proper and safe use of the equipment, please carefully read and follow the instructions in the Operation Manual.

For details, please contact:

15-05, Printed in Japan

5.7 / 8.4 inch Color LCD
Echo Sounder

CVS-126 / 128

DIGITAL

Digital Brings Big Catch

CVS-126





CVS-128

CVS-126/128 Digital Echo Sounder, the Clear Choice

CVS-126 : 5.7-inch color LCD, 600W, 50/200kHz
CVS-128 : 8.4-inch color LCD, 600W/1kW, 50/200kHz

Digital

- Koden Digital Filtering (KDF™) technology provides a clearer image and deeper sounding at higher frequencies.
- Superior clutter suppression and signal to noise ratio, faster update rate for increased performance in shallow water.

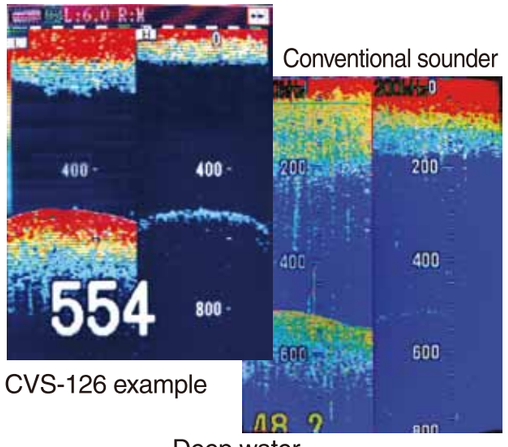

CVS-126 example

Conventional sounder

Deep water

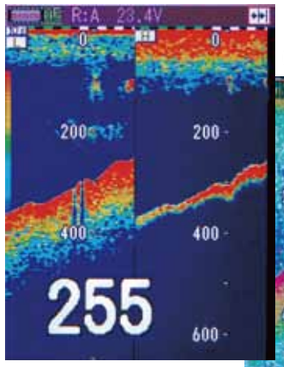

CVS-126 example

Conventional sounder

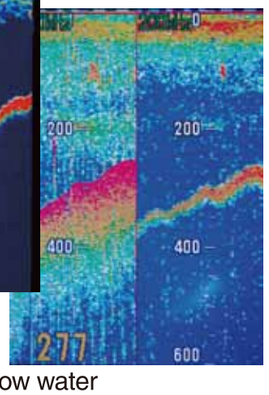

Shallow water

Store Image

- Stores up to 10 screen images in built-in memory for recall later by a single touch.

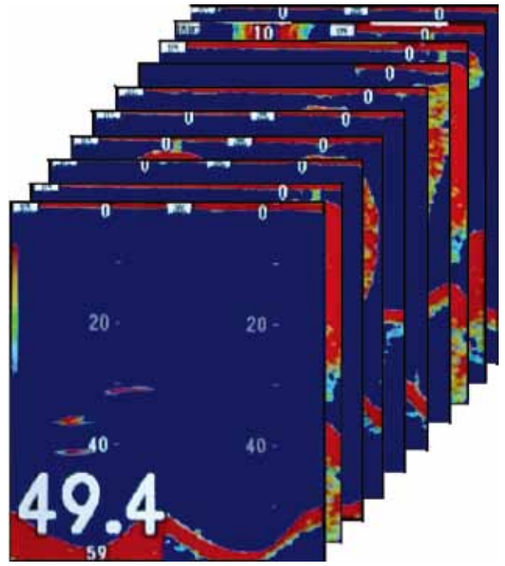

Fishing Hot Spot

- Follow our easy to understand navigational display back to your favorite fishing spots or other previously saved positions in memory.
  Optional GPS input required.

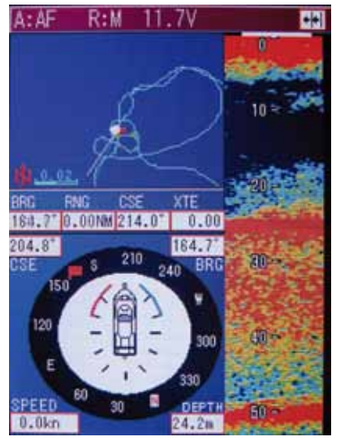

Sona-Tone™

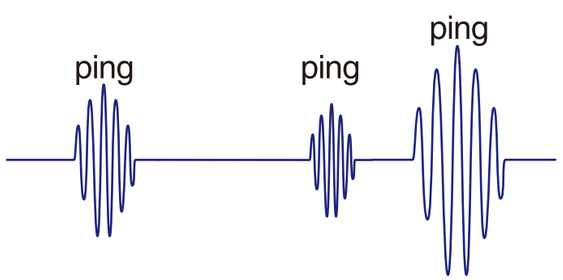

- Exclusive Sona-Tone™ identifies what's under your boat with different sounds for fish and schools of fish.

Easy Operation

- Simply arranged keypad, knob and comprehensive on-screen menus give easy access to all system functions.





Detection area display

- Know exactly the bottom area covered by the low and high frequency sound beams.
  This can help you target the fish directly under the boat or off to the side.

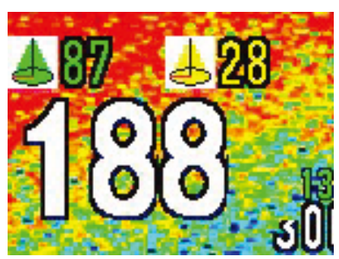

*The beam angle varies depending on the transducer frequency and may vary depending on the installation method of the transducer. The displayed data should be used for reference only

Fish Information

- Approximate size of a single fish detected in depth between 3m and 100m is indicated in cm when used with a Koden recommended transducer.

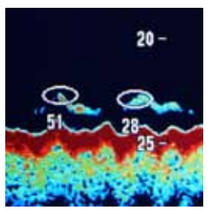

* Indication would not be always the response from a single fish and may be in error due to various environmental conditions. Fish information data should be used for reference only.
* Recommended transducers are TD-500T-2B or TD-500T-3B for CVS-126 and TD-501C for CVS-128.

Auto Function

- Takes the guesswork out of operating the sounder. Even a novice user can achieve professional results by letting the CVS-126/128 pick the optimum settings for such functions as Gain, Range and Shift.

To ask about this model or to buy

Every sale is made direct, so you can talk it through first

Call

Michael McGlinn

0494 901 661

sales@westcoastmarineelectronics.com.au

https://westcoastmarineelectronics.com.au/

West Coast Marine Electronics, Fremantle, Western Australia

This page was added by West Coast Marine Electronics. The pages of this brochure are the maker's own and have not been changed. Makers change specifications from time to time, so please call to confirm before you rely on them.