JRC

Color Echo Sounder

JFC-130/130HP

(1kw) (3kw)

Equivalent to JFV-130 in display clarity, function and performance

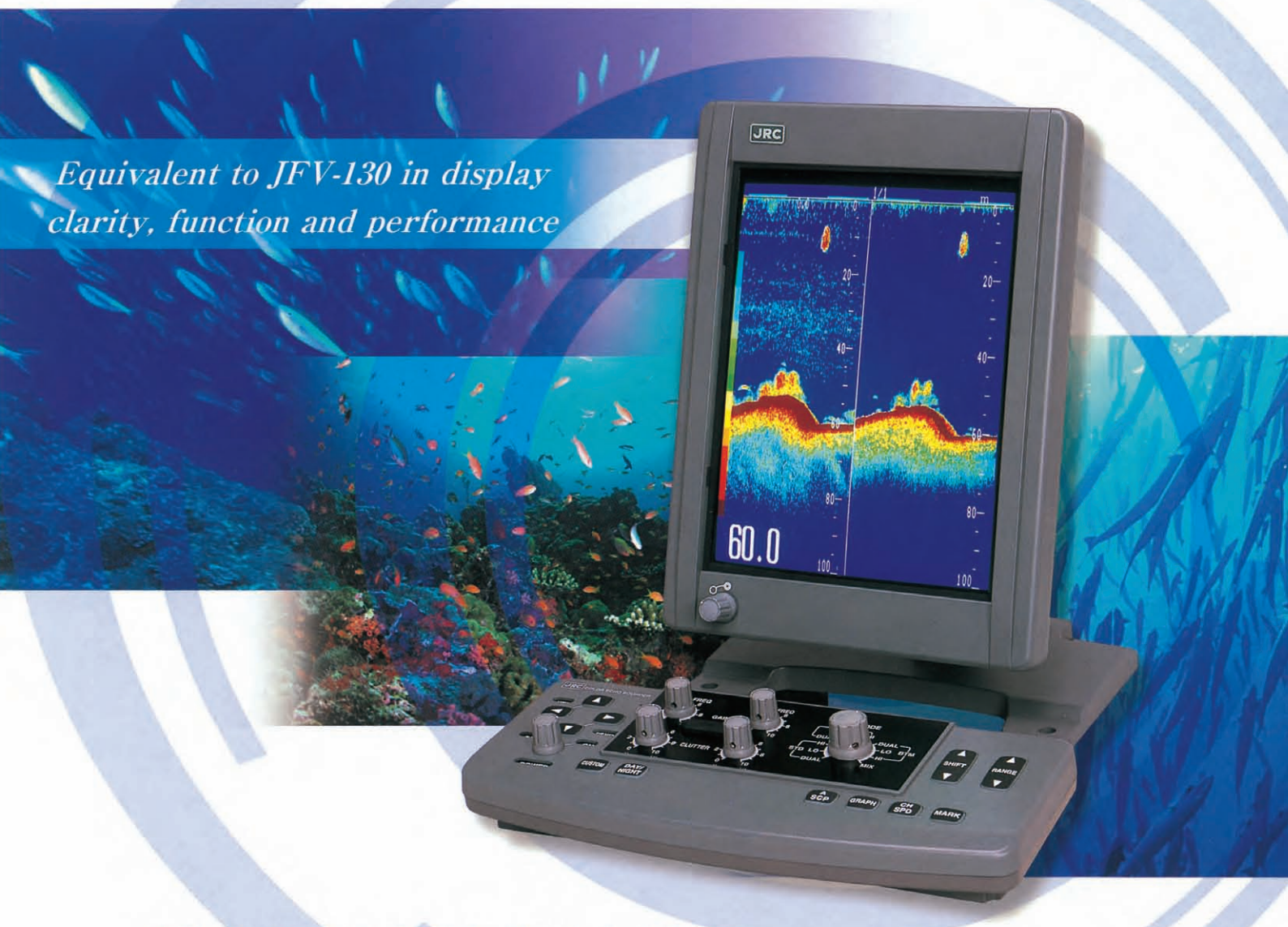

- Bottom Hardness (BH) data, direct output to PC
- Four component configuration: Transducer, Processor, Keyboard and Display
- Variable vertical and horizontal screen, Flush mount or Bracket mounting
- 10.4" Color LCD (640x480 VGA) display meets IPX5 waterproofing, vibration specifications IEC60945
- Display unit monitor swivels and tilts for easy viewing with variable illumination setting for personal preference
- Second display capability with one processor using optional RGB Video output (CAD-239)
- Lower power consumption comparing with JFV-130/131 CRT type

JRC Japan Radio Co., Ltd.

Sensitivity, clutter rejection and STC (debubblizing) finely adjustable for sea areas, seasons and fishing methods

1. Flexible selection of three types fishing ground and fish species
2. Detection of surface fish by high-speed sounding
3. Bottom fish clearly discriminated by sea bottom enlargement
4. Fish species clearly recognizable on three split displays

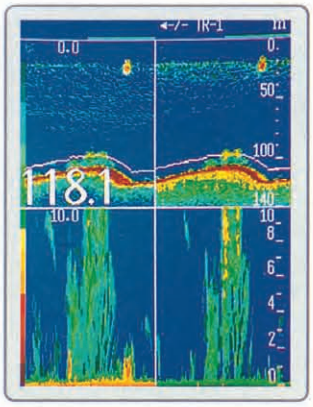

Sea bottom enlargement

5. Water temperature and depth graphs in overlay with fish echo display by one key-touch operation
6. Bottom topological display to readily discriminate bottom rocks and soil

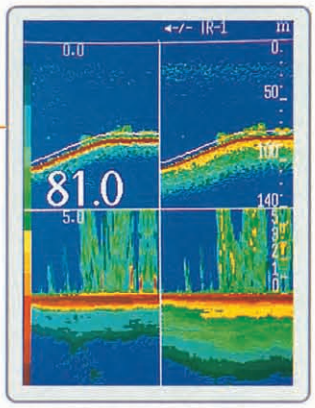

Dual-freq. display
with bottom discrimination mode

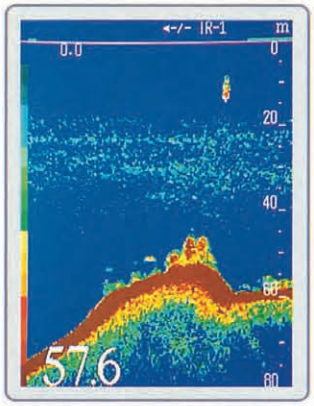

High-freq. display

Function

Simple Operation

- Keys and controls on the operation panel are minimized. Sensitivity, clutter rejection and STC are finely adjustable depending upon sea areas, seasons and fishing methods.
- Three types of fishing ground or fish species can be present and stored. Once they are present, any type of fishing ground or fish species is selectable and can be reset to another type by pushing the CUSTOM button.

Clear Detection of Surface and Bottom fish

- The adoption of a narrow zero-line fuction and a new transducer makes the transducer line finer. The high-speed emission of 600(JFC-130)/300(JFC-130HP) pulses or more per minute enables small fish in the surface water to be clearly detected. The bottom enlargement display in 16 color gradations discriminates bottom fish from the sea bottom distinctly.

Various Functions

Simultaneous display of two images

When an image is switched to another, two images are immediately displayed for ease of comparsion.

A-Scope Display

A fish echo is displayed in a color tone with a width depending upon its signal intensity. The display mode is turned on or off by a one key-touch operation.

Distinction (mix) mode

The three-split display mode in which a distinction display is added to the dual-frequency split display is very useful in discriminating fish species.

Water temperature and depth graphs

Water temperature and depth graphs can be displayed in overlay with a fish echo image. Since these temperature and depth variations are stored, the graphs may be easily displayed by one key-touch operation. Normally, the fish echo image is displayed on a full screen.

Bottom discrimination mode

In the bottom lock enlargement mode, a long bottom tail shows a hard bottom (such as base rock) while a short bottom tail shows a soft bottom (mud and sand). Thus, the bottom topology can be discriminated depending upon the tail width.

Major Specification

Display	:10.4-inch high-luminance TFT color LCD
Power supply	:12/24/32 V DC (10.8-45 V DC)
Power consumption	:60 W or less (at 24 V)
Dimensions	:295(W) × 324(H) × 372(D)mm
Mass	:Approx. 16kg
Operating temperature	:−15℃ to +55℃
Brightness	:Adjustable by control(in common use with power switch)
Display modes	:Standard
	:Standard/Standard
	:Standard/A-scope
	:Standard/enlargement
	:Standard/Bottom enlargement
	:Standard/Bottom discrimination enlargement
	:Mixed mode

Frequencies	:One or two frequencies of 200/75/50/28 kHz
Output power	:1 kW or 3 kW(HP)
Depth range	:2,000m + shift 1,500m
Depth scale	:meter,feet,fathoms and optional
Scan speed	:9 steps and stop
Background color	:4 colors
Echo colors	:16 colors/8 colors
Interference rejection	:2 steps
Data indications	:Water depth,temperature and ship speed
Graphs	:Water temperature and depth
External input/output	:NMEA0183 input/output,JRC format
	:Water temperature and speed sensors

System diagram

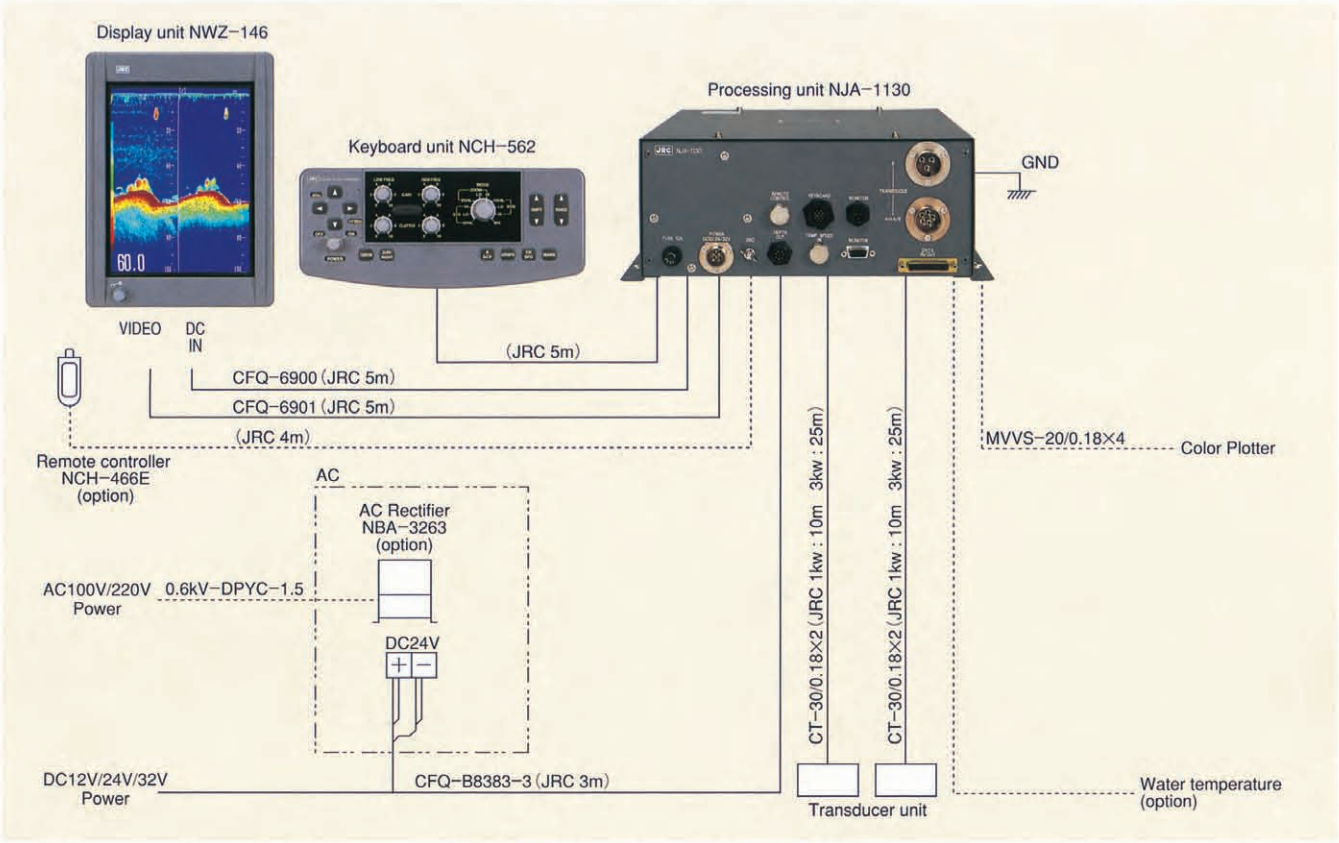

Outline drawing

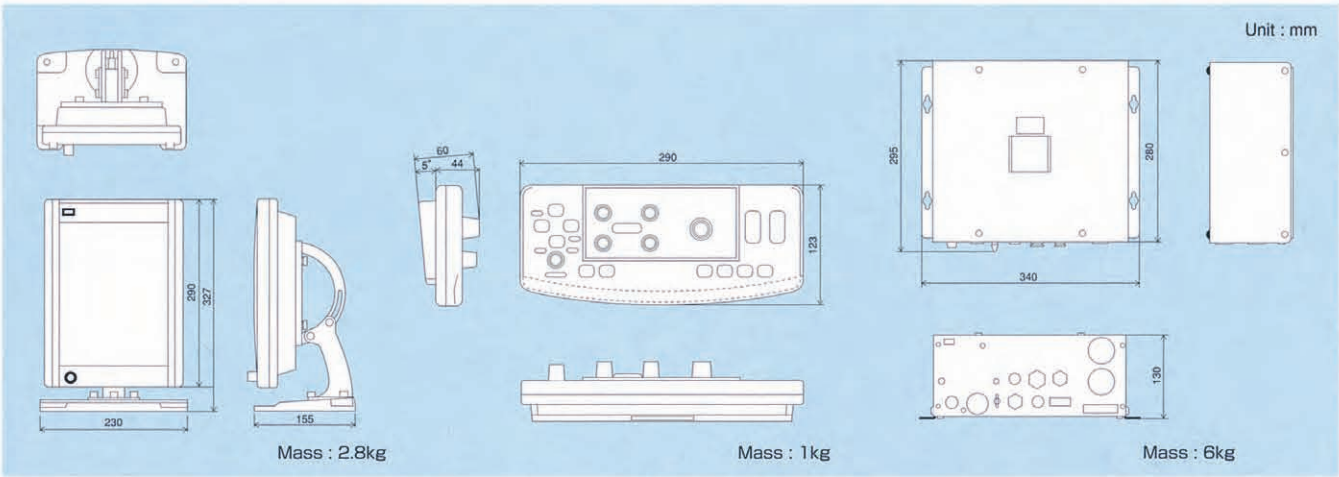

• Specifications may be subject to change without notice.

For further information, contact:

JRC Since 1915 **Japan Radio Co., Ltd.**

URL http://www.jrc.co.jp/eng/

Main Office: Fujisawa bldg. 30-16, Ogikubo 4-chome
Suginami-ku, Tokyo 167-8540, Japan
Telephone: +81-3-6832-1816
Facsimile: +81-3-6832-1845

Overseas Branches : Seattle, Amsterdam, Athens, Manila
Liaison Offices : Taipei, Jakarta, Singapore, Hanoi, Shanghai, Hamburg, New York

28EM

ISO9001, ISO14001 Certified

© 2003.5
2012.5 CAT.No.Y10-137 (No.489-7-3) D Printed in Japan

To ask about this model or to buy

Every sale is made direct, so you can talk it through first

Call

Michael McGlinn

0494 901 661

sales@westcoastmarineelectronics.com.au

https://westcoastmarineelectronics.com.au/

West Coast Marine Electronics, Fremantle, Western Australia

This page was added by West Coast Marine Electronics. The pages of this brochure are the maker's own and have not been changed.
Makers change specifications from time to time, so please call to confirm before you rely on them.