FURUNO

MODEL

SCX-20/21

SATELLITE COMPASS™



SCX-21
NMEA0183

SCX-20
NMEA2000

NAVnet Connect

Multi-GNSS

SCX-20 ONLY
NMEA2000 Certified

www.furuno.com

AMAZING MULTI-GNSS SATELLITE COMPASS™

RELIABLE ACCURACY IN THE MOST CHALLENGING SITUATIONS



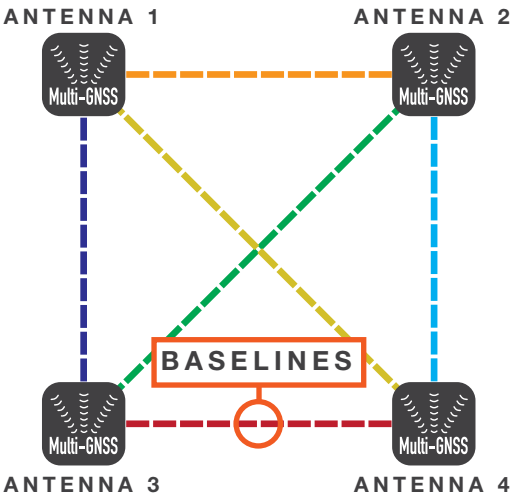

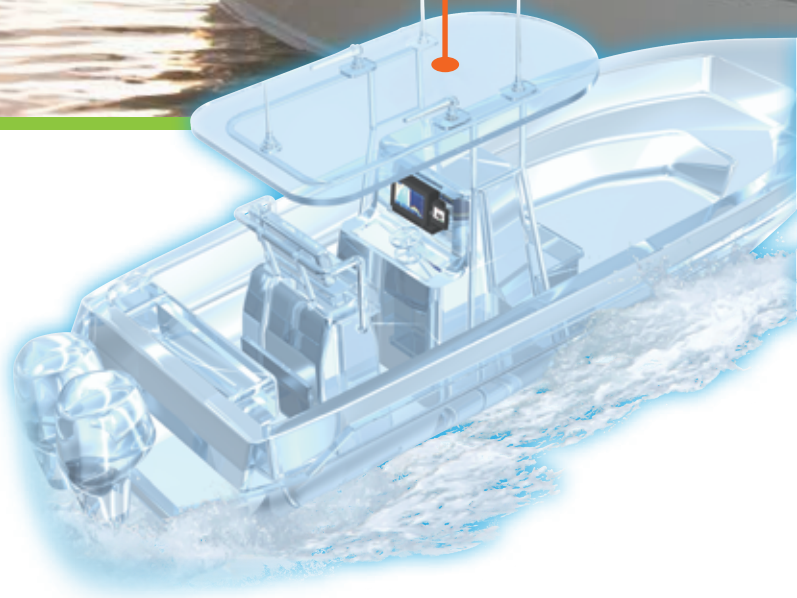

The SCX-20 and SCX-21 are designed with simplicity in mind and can be mounted virtually anywhere on the vessel.

Utilizing four separate GNSS Antennas for the ultimate in responsiveness, the SCX-20 and SCX-21 set a new standard for reliable and accurate heading for all of your marine electronics. Traditionally, a Satellite Compass™ calculates heading using one baseline between two antennas; the SCX-20/21's four antennas can calculate heading information using any one of the six baselines drawn between the four antennas.

The unprecedented quad-antenna design of the SCX-20 and SCX-21 makes them capable of calculating extremely accurate heading, pitch, roll, and heave information. They are the perfect heading solution for complex vessel installations where the view of satellites may sometimes be obstructed.





The SCX-20 is a perfect companion unit for the NAVpilot-300.



Connect the SCX-20 to NavNet TZtouch MFDs for highly accurate heading data!

EXPERIENCE SUPERIOR ACCURACY

The SCX-20 and SCX-21 enhance the performance of onboard equipment such as Radar, Fish Finders, Sonar, and Autopilots. Accurate heading information empowers your NAVpilot to keep a better course, saving time, fuel, and money on every voyage; meanwhile, precise pitch, roll, and heave information stabilizes the display for many Furuno Fish Finders and Sonars, allowing for an accurate presentation even in the roughest of seas.

RADAR/PLOTTER

True echo trails are available when the SCX-20 or SCX-21 is connected to your Furuno Radar, helping to determine own ship's movement as well as the movement of other vessels. Accurate speed and heading data ensures that target trails are displayed smoothly and accurately, without the jagged, zig-zag appearance common to compasses with a higher degree of deviation.

TRUE MOTION TARGET TRAILS

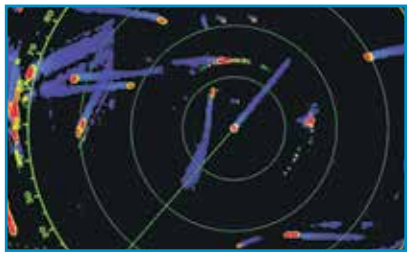

FISH FINDER

Even in heavy seas, accurate heave compensation from SCX-20 or SCX-21 enable Fish Finders such as the FCV-1150 or NavNet TZtouch/TZtouch2/TZtouch3 to show you an unwavering presentation of the seabed, without the undulations caused by sea conditions.

HEAVING COMPENSATION

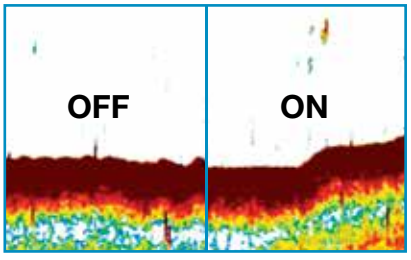

SONAR

Accurate pitch and roll information allows Furuno Sonar systems to display a steady image on the screen, even in foul weather.

PITCH & ROLL COMPENSATION

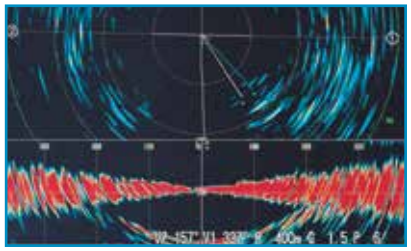

RADAR ECHO TRAIL ZIG-ZAG DOMINATION

TESTED. PROVEN. SUPERIOR.

FURUNO SCX-20/21

When connected to Furuno SCX-20/21, the Radar's echo trails hold steady and clearly depict an accurate echo trail thanks to the SCX-20/21's amazing accuracy.

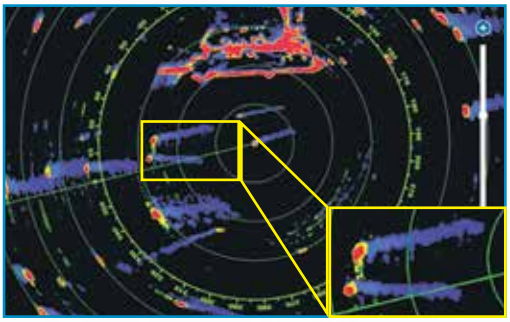

Company A

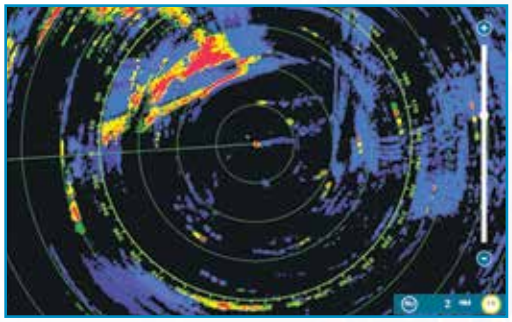

Company A's satellite compass fails to uphold a steady heading, making echo trails virtually unintelligible.

Company B

Company B's heading accuracy fluctuates by +/- 3˚ with a slower update, causing an echo trail that has a wide zig-zag pattern.

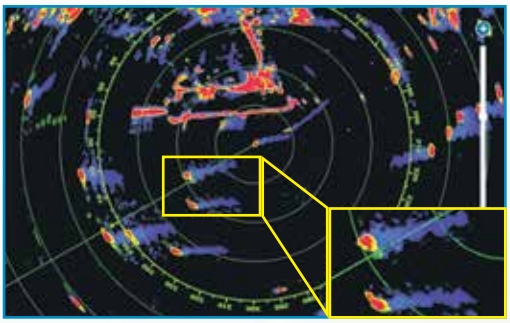

Company C

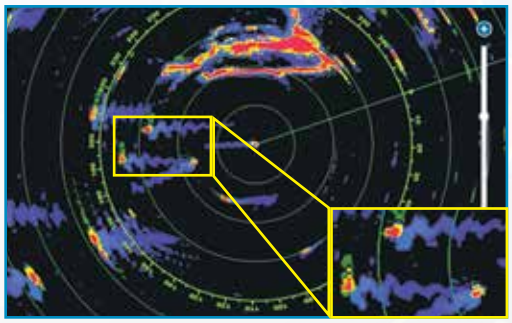

Company C's heading accuracy fluctuates by +/- 5˚ with a faster update, causing an echo trail that is indistinguishable and confusing.

MORE ACCURATE SCX-20/21 < COMPANY B < COMPANY C < COMPANY A **LESS ACCURATE**

PRECISION NAVIGATION DATA



Full NMEA2000 Certification provides plug and play connectivity to any NMEA2000 network. Distribute high-accuracy navigation data as well as air temperature and barometric pressure. Initial Setup and configuration can be done from any Navnet TZT2/TZT3 MFD, Navpilot-300, or use the free Furuno SC Setting Tool PC Software when properly interfaced.

Directly connect any Furuno or compatible NMEA0183 equipment to distribute high speed and accurate heading, position, speed, roll, pitch and heave as well as air temperature and barometric pressure. Connect a Furuno GP-39 Display to control and configure the flexible SCX-21 Output ports. Select 4800 low speed/38400 high speed data and enable, disable, or control the repetition interval of the individual strings of the individual output ports.



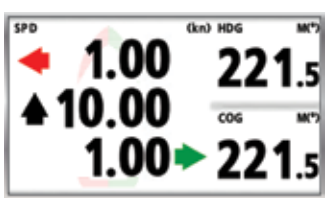

3-AXIS SPEED

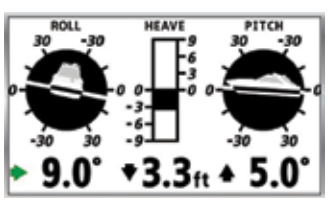

PITCH/ROLL/HEAVE

RATE OF TURN (ROT)

HEADING (HDG)

SCX-20/21
SATELLITE COMPASS™

- Perfect for NavNet TZtouch MFD, NAVpilot-300, and WASSP installations
- Outputs accurate Time, Position, Heading, COG/SOG, ROT, Roll/Pitch/Heave 3-Axis Speed, Air Temperature and Air Pressure data
- Unprecedented heading accuracy for Radars, Sonars, and Navigation
- Utilizes four Multi GNSS (GPS, QZSS, GLONASS, Galileo) antennas
- 1.0 degree heading accuracy, 0.02 knot speed accuracy
- Lightweight antenna - only 1.0kg!

FURUNO SCX-20/21

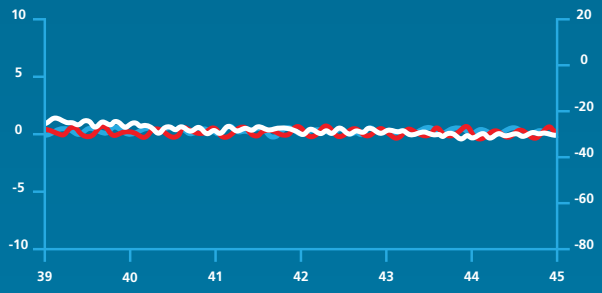

HEADING DEVIATION
ROLL
PITCH
y = Standard Deviation (deg)
x = Time (sec)

COMPANY A

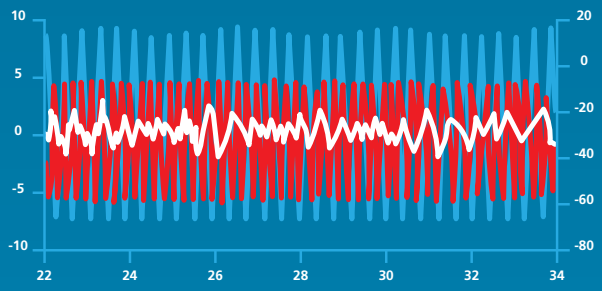

COMPANY B

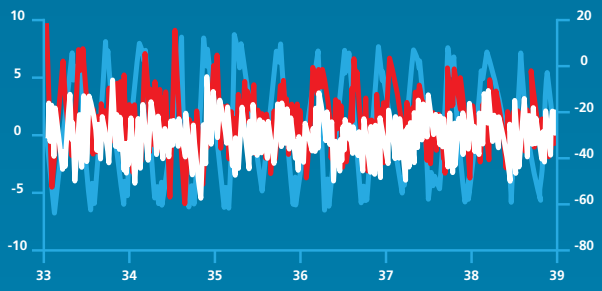

Test Conditions:
Roll - Amplitude 20°, 10 sec. period
Pitch - Amplitude 10°, 6 sec. period
Heading - 5°, 15 sec. period
Standard - ISO22090-3 (2015)



SCX-20
NMEA2000

SCX-21
NMEA0183

GENERAL

Frequency	1575.42 MHz (GPS/Galileo/QZSS/SBAS) 1602.5625 MHz (GLONASS)
Tracking Code	C/A (GPS/QZSS/SBAS), E1B (Galileo), L1OF (GLONASS)
Attitude	Heading/Roll/Pitch: 1.0° rms (static) 0.5° rms (dynamic)
Follow Up	45°/sec
Heave Accuracy	σ5cm
Timing	(1PPS) Accuracy: 50μs (SCX-21 only)
Settling Time	60 seconds approx.
Position Accuracy	
GPS:	5m approx. (2 drms, HDOP < 4)
MSAS:	4m approx. (2 drms, HDOP < 4)
WAAS:	3m approx. (2 drms, HDOP < 4)
Position Fix Time	50 seconds approx.
Update Interval	
Attitude:	50 Hz MAX
Position:	10 Hz MAX
Ship Speed Accuracy	
SOG:	0.02 kn rms (tracking satellites 5 or more) 0.2 kn rms (tracking satellites 3 or more)
VBW:	0.02 kn rms (tracking satellites 5 or more, at antenna position) 0.08 kn rms (tracking satellites 5 or more, at another position) 2.0% of ship's speed or 0.2 kn, whichever is greater (tracking satellites 3 or 4)
Pressure	850 to 1100 hPa (temp range: 0°C to > 50°C), ± 1.0 hPa (offset adjustment)
Temperature	-20°C to > 55°C (relative wind: ≥ 4 kn), ± 2.0°C (offset adjustment)

POWER SUPPLY

Standard:	12-24 VDC: 0.2-0.1 A (4 LEN @ 9 VDC)

INTERFACE

Ports	
SCX-20:	1 Port NMEA2000
Input	059392/904, 060160/416/928, 061184, 065240, 126208/720, 130847
Output	059392/904, 060928, 061184, 065280,126208/464/720/992/993/996/998, 127250/251/252/257/258, 129025/026/029/538/539/540,130310/312/314/316/577/578/816/817/818/819/822/823, 130833/834/842/843/845/846/847
SCX-21:	3 Ports NMEA0183, Tx 3 Ch, Rx 2 Ch 1 Port PPS, RS-485, rising edge detecting
Data Sentences	
Input:	AAM*, APB*, BOD*, BWC*, BWR*, RMB*, TLL*, XDR, XTE*
Output:	AAM*, APB*, BOD*, BWR*, DTM, GGA, GLL, GNS, GSA, GSV, HDG, HDT, HRM, POS, RMB*, RMC, ROT, THS, TLL*, VBW, VTG, XTE*, ZDA GPatt, Gphve, GPimu, pidat, SDmrk*, GPmsv, hdcom
P Sentences	*: GP-39 REQUIRED

ENVIRONMENTAL CONDITIONS

Ambient Temperature:	-25°C to +55°C (storage: -30°C to 70°C)
Relative Humidity:	95% or less at +40°C
Degree of Protection:	IP56

EQUIPMENT

Cable Assembly	SCX-20: FRU-NMEA-PMMFF cable (6m) SCX-21: FRU-CF-F cable (15m) SCX-20: Roof or Pole Mount
Standard	SCX-21: Pole Mount ONLY
Optional Supply	Installation materials, spare parts
Interface Unit:	
	SCX-20: FI-70 SCX-21: GP-39

INTERCONNECTION DIAGRAM

NMEA2000® Network Configuration:

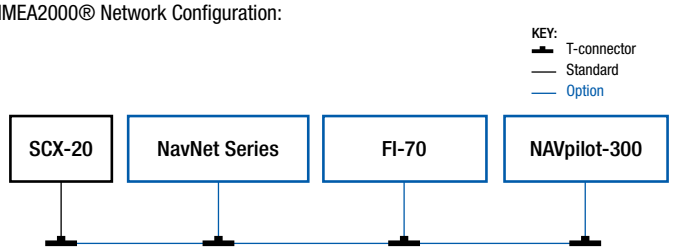

NMEA0183 Network Configuration:

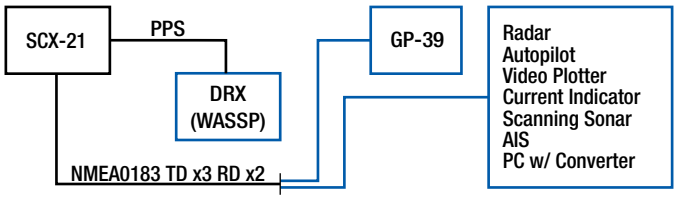

UNIT DIAGRAMS

SCX-20 w/ roof mount
1.4 kg (3.0 lbs)

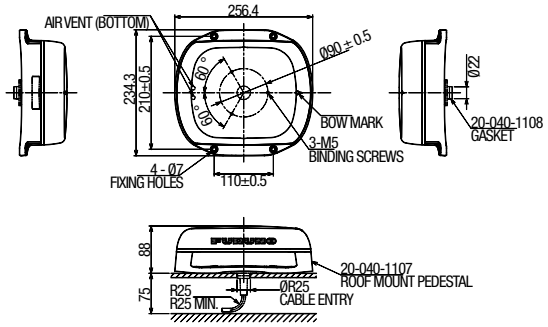

SCX-20 w/o mount
1.0 kg (2.2 lbs)

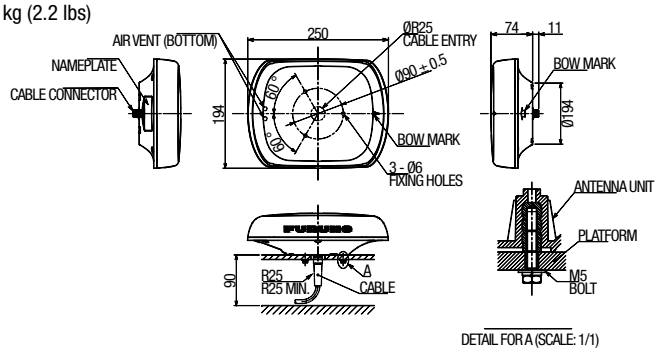

SCX-20/21 w/ pole mount
1.2 kg (2.64 lbs)

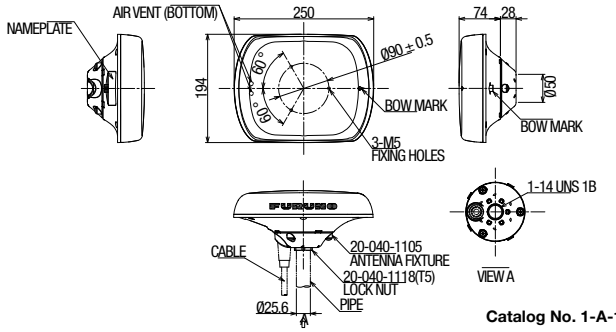

Catalog No. 1-A-19113SK
Rev. B
CA000001393

FURUNO ELECTRIC CO., LTD.
Japan www.furuno.com
FURUNO U.S.A., INC.
U.S.A. www.furunousa.com
FURUNO PANAMA S.A.
Republic of Panama www.furuno.com.pa
FURUNO (UK) LIMITED
U.K. www.furuno.co.uk
FURUNO NORGE A/S
Norway www.furuno.no
FURUNO DANMARK A/S
Denmark www.furuno.dk
FURUNO SVERIGE AB
Sweden www.furuno.se
FURUNO FINLAND OY
Finland www.furuno.fi
FURUNO POLSKA Sp. Z o.o.
Poland www.furuno.pl
FURUNO DEUTSCHLAND GmbH
Germany www.furuno.de
FURUNO FRANCE S.A.S.
France www.furuno.fr
FURUNO ESPAÑA S.A.
Spain www.furuno.es
FURUNO ITALIA S.R.L.
Italy www.furuno.it
FURUNO HELLAS S.A.
Greece www.furuno.gr
FURUNO (CYPRUS) LTD
Cyprus www.furuno.com.cy
FURUNO EURUS LLC
Russian Federation www.furuno.ru
FURUNO SHANGHAI CO., LTD.
China www.furuno.com/cn
FURUNO CHINA CO., LTD.
Hong Kong www.furuno.com/cn
FURUNO KOREA CO., LTD
Korea
FURUNO SINGAPORE
Singapore www.furuno.sg
PT FURUNO ELECTRIC INDONESIA
Indonesia www.furuno.id
FURUNO ELECTRIC (MALAYSIA) SDN. BHD.
Malaysia www.furuno.com/my

BEWARE OF SIMILAR PRODUCTS
All brand and product names are trademarks, registered trademarks, or service marks for their respective holders.
SPECIFICATIONS SUBJECT TO CHANGE WITHOUT NOTICE
Printed in U.S.A.

To ask about this model or to buy

Every sale is made direct, so you can talk it through first

Call

Michael McGlinn

0494 901 661

sales@westcoastmarineelectronics.com.au

https://westcoastmarineelectronics.com.au/

West Coast Marine Electronics, Fremantle, Western Australia

This page was added by West Coast Marine Electronics. The pages of this brochure are the maker's own and have not been changed.
Makers change specifications from time to time, so please call to confirm before you rely on them.