Echonautics®
soundwave innovation



Advancing Transducer Technology

- Precision Engineering for Reliable Performance
- Advanced CHIRP Capabilities for Deeper Penetration
- Clear, Consistent Performance Across the Range
- Designed in USA, Manufactured in Italy
- Trusted Support — Backed by a 3-Year Warranty

Images are for illustrative purpose only. Products may change without notice

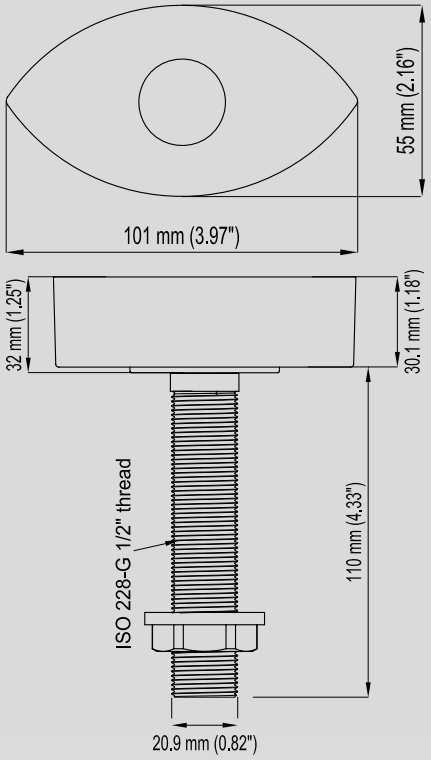

CB101

Dual Frequency Bronze Thru-Hull* - CB101

600W Dual Frequency 50/200kHz CW

This traditional CW (Continuous Wave) 600W 50/200kHz Dual Frequency bronze thru-hull transducer is a cost-effective choice for delivering excellent target detail in shallow water, as well as reliable deep-water bottom tracking. This transducer is a solid performer for a wide variety of sonars and saltwater fishing applications.

This transducer's thru-hull design is ideal for a wide variety of fishing boats, from center consoles to sportfishing yachts. The addition of Echonautic's optional fairing block will deliver greatly enhanced sonar performance at higher vessel speeds, allowing anglers to track bottom and mark suspended fish and bait schools while trolling or running to the fishing grounds.



CB101

Designed as a drop-in solution for a wide range of fishing boats, the Echonautics CB101D600 is compatible with all major sonar manufacturers.

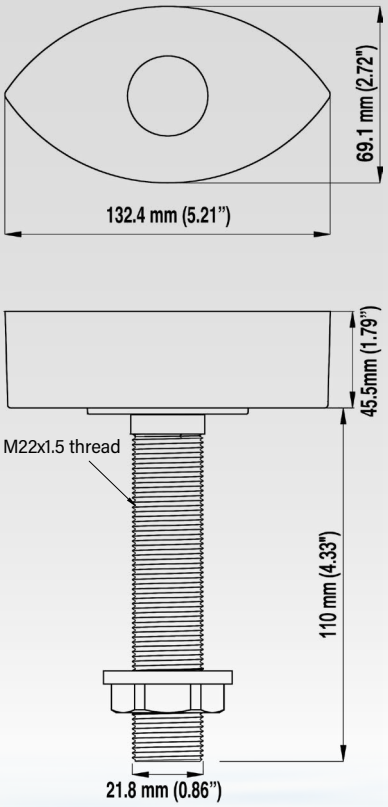

CB131

CHIRP Bronze Thru-Hull - CB131

600W / 1kW Medium & High Frequency CHIRP

Echonautics offers a range of CHIRP bronze thru-hull transducers for today's sportfishing vessels and sonar systems, delivering superior depth capabilities, enhanced bottom detail, better detection and separation of fish targets, and superior performance at higher vessel speeds.

To accommodate a full range of electronics, vessels and fishing applications, this Echonautics Series includes Medium Frequency CHIRP (80-130kHz) 600W, High Frequency CHIRP (130-210kHz) 600W, Medium Frequency CHIRP (85-135kHz) 1kW, and High Frequency CHIRP (130-210kHz) 1kW. This series of high-tech transducers is designed to provide eye-opening sonar performance that helps serious anglers find and catch more fish, whether trolling for offshore pelagic gamefish or targeting deep wrecks, reefs, and ledges.



CB131

Each of these CHIRP transducers can be paired with an optional Echonautics fairing block, custom engineered to deliver superior fish and structure detection and bottom tracking at higher vessel speeds. This series provides a high-performance CHIRP option for a variety of popular sonar systems. Unlock the fish-finding power of your boat's sonar system with a 600W or 1kW CHIRP transducer by Echonautics.

Bronze thru-hull transducers should not be used in metal hulled boats

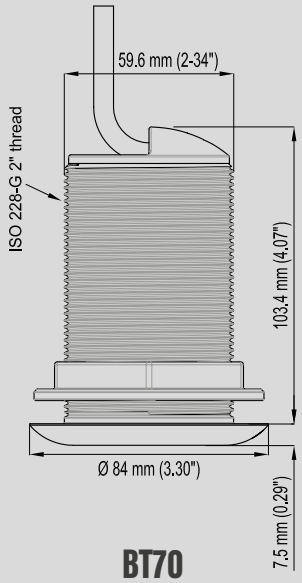

BT70

Angled Element Low Profile Bronze Thru-Hull* - BT70

600W Dual Frequency 50/200kHz CW
600W Medium/High Frequency CHIRP
300W Low/Medium Frequency CHIRP

This popular series is available in both CW (Continuous Wave) dual frequency or a variety of high-performance CHIRP versions. The low profile thru-hull design minimizes drag below the hull surface and provides superior fish finding and bottom tracking performance at high speeds. This makes it an ideal transducer solution for high-performance center consoles, flybridge sportfishers, and other popular vessels.

With traditional 600W 50/200kHz dual frequency and Low/Medium/High Frequency CHIRP options, the BT70 Series is a versatile performer for many sportfishing vessels. Compatible with major sonar brands, the full BT70 Series is offered in versions with 0°, 12°, and 18° angled elements to accommodate various hull deadrise angles up to 24° while delivering a focused vertical beam on targets below. This includes three tilt options each for 300W Low Frequency CHIRP (40-75kHz), 300W Medium Frequency CHIRP (95-155kHz), 600W Medium Frequency CHIRP (80-130kHz) and 600W High Frequency CHIRP (130-210kHz).



BT70

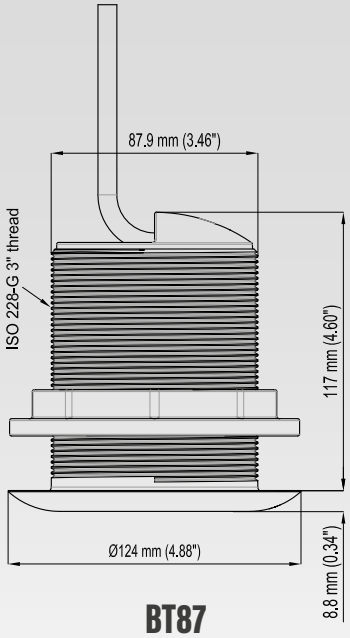

BT87

Angled Element High Powered Low Profile Bronze Thru-Hull * - BT87

1kW Low/Medium/High Frequency CHIRP

This low-profile bronze thru-hull transducer minimizes drag below the hull surface, making it ideal for center consoles and other high-performance fishing boats. With nothing to interfere with clean water flowing across the transducer face, this design delivers optimum sonar performance at higher boat speeds, meaning that anglers can detect fish and track bottom when trolling or motoring to offshore fishing grounds. The BT87 Series' narrow beamwidth and angled element design provides vertical beam orientation, making it excellent for pinpointing fish holding tight to reefs, wrecks, and other structure.

Powerful 1kW CHIRP performance provides superior fish detection and enhanced sonar detail in deep water. Available in 0°, 12°, and 18° tilt versions for use on vessels with various hull deadrise angles up to 24°. Each tilt variation is available in Low Frequency CHIRP (40-60kHz), Medium Frequency CHIRP (85-135kHz) and High Frequency CHIRP (130-210kHz). The BT87 Series is a powerful solution for many high-performance CHIRP sonar systems.



BT87

Bronze thru-hull transducers should not be used in metal hulled boats

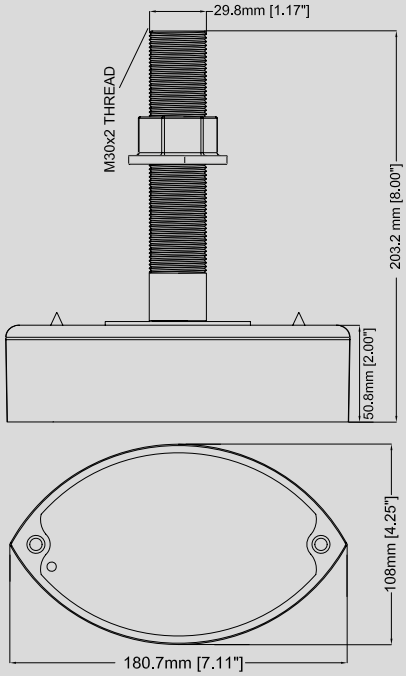

ST180

Dual Frequency Stainless Steel Thru-Hull - ST180

1kW Dual Frequency 50/200kHz CW

Echonautics Model ST1801kW is a traditional CW (Continuous Wave) thru-hull transducer crafted from quality stainless steel for superior corrosion resistance and durability in the harsh marine environment. Providing 1kW output power and dual frequency operation (50/200kHz), this is an ideal solution for a wide range of recreational and commercial fishing vessels, including those with steel or aluminum hulls.



ST180

Performance is optimized by using with Echonautics' optional fairing block, especially when metering suspended gamefish or tracking bottom at speed. Compatible with major sonar brands, this is a high-performance sonar solution for many vessels and a wide array of fishing situations.

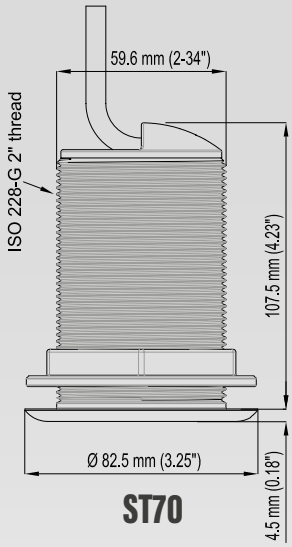

ST70

Angled Element Low Profile Stainless Steel Thru-Hull - ST70

600W Dual Frequency 50/200kHz CW
600W Medium/High Frequency CHIRP

This angled element series is offered in traditional CW (Continuous Wave) 600W dual frequency and 600W Medium/High Frequency CHIRP versions, all featuring a corrosion resistant and durable stainless-steel housing. The low profile thru-hull design minimizes drag below the hull surface while delivering superior target detail, structure resolution and bottom tracking performance — even when the boat is moving at speed. This makes it an ideal choice for a variety of high-performance fishing boats and all major sonar brands.



ST70

All ST70 models are offered in versions with 0°, 12°, and 18° angled elements to accommodate various hull deadrise angles up to 24° with vertical beam orientation for superior performance. This includes three tilt options each for Medium Frequency CHIRP (80-130kHz), and High Frequency CHIRP (130-210kHz).

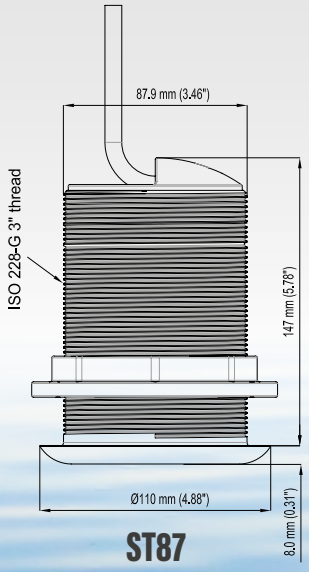

ST87

Angled Element High Powered Low Profile Stainless Steel Thru-Hull - ST87

1kW Low/Medium/High Frequency CHIRP

Featuring a rugged and corrosion-resistant stainless-steel housing, this tilted element thru-hull delivers 1kW CHIRP performance for today's top-end sonar systems. The low-profile design minimizes drag below the hull surface for better depth performance, target resolution and bottom detail over a range of boat speeds. This is the ultimate transducer option for a wide variety of sportfishing boats.



ST87

The ST87 Series is offered in 0°, 12° and 18° angled elements to accommodate different hull deadrise angles up to 24°. All three tilt options are offered in Low Frequency CHIRP (40-60kHz), Medium Frequency CHIRP (85-135kHz) and High Frequency CHIRP (130-210kHz).

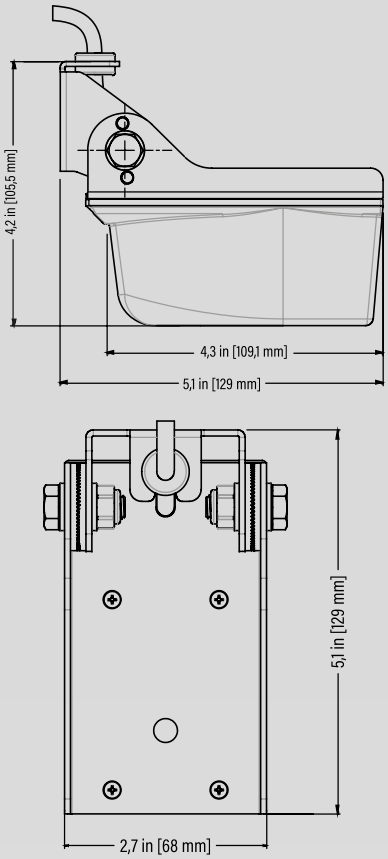

TM70

Transom Mount - TM70

600W Dual Frequency 50/200kHz CW

600W Medium/High Frequency CHIRP

300W Medium Frequency CHIRP

The compact TM70 transom mount series is ideal for small, trailered boats where a thru-hull installation isn't practical — including freshwater boats and center consoles. They're simple to install and avoid the risk of a thru-hull fitting interfering with trailer loading.

The TM70 series housing shape and robust stainless steel mounting bracket are designed to minimize drag while delivering superior target detail, structure resolution and bottom tracking performance - even when the boat is moving at speed.

With traditional 600W 50/200kHz dual frequency and Medium/High Frequency CHIRP options, TM70 series is a versatile performer for many recreational fishing and leisure boats.



TM70

Compatible with major sonar brands, the TM70 matches transom angles up to 70° while delivering a focused vertical beam on targets below.

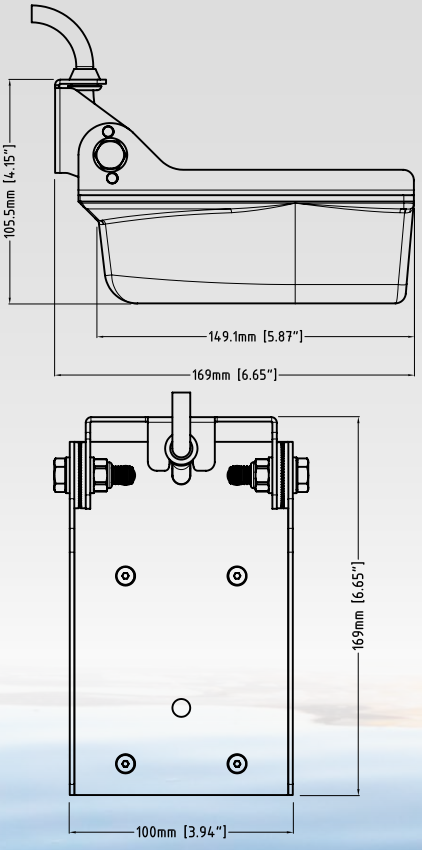

TM87

Transom Mount - TM87

1kW Medium/High Frequency CHIRP

TM87 transom mount series is ideal for mid-size trailered boats, offshore fishing vessels and freshwater anglers fishing in shallow to mid-range depths, where a thru-hull installation isn't practical — including freshwater boats and center consoles. They're simple to install and avoid the risk of a thru-hull fitting interfering with trailer loading.

The TM87 series housing shape and robust stainless steel mounting bracket are designed to minimize drag while delivering superior target detail, structure resolution and bottom tracking performance - even when the boat is moving at speed.



TM87

With 1kW Medium/High Frequency CHIRP options, the TM87 is a powerful solution for many high-performance CHIRP sonar systems used for leisure & cruiser boats, sport & offshore fishing matching transom angles up to 70° while delivering a focused vertical beam on targets below.

Technical Specifications

CB101D600

Function	Depth and Temperature
Frequency	CW 50 / 200 kHz
Mount type	Thru Hull, with fairing. Note: fairing block is optional
Deadrise	Max deadrise 20° with fairing block
Material	Bronze
RMS Power	600 W
Beamwidth	42° / 11° @ -3db
Max Depth	Max @50 kHz = 365 m (1,200 ft) Max @200 kHz = 206 m (700 ft)
Temp. sensor	NTC
Acoustic window	Urethane
Weight	1400 g (49 oz)
Cable length	9 m (29.5ft)
Hole diameter	25 mm (0.98")

BT70D600 / ST70D600

Function	Depth and Temperature
Frequency	CW 50 / 200 kHz
Mount type	Thru Hull
Tilt / Deadrise	18° tilt version: for 16° to 24° hull deadrise 12° tilt version: for 8° to 15° hull deadrise 0° tilt version: for 0° to 7° hull deadrise
Material	Bronze / Stainless steel
RMS Power	600 W
Beamwidth	42° / 11° @ -3db
Max Depth	Max @50 kHz = 365 m (1,200 ft) Max @200 kHz = 206 m (700 ft)
Temp. sensor	NTC
Acoustic window	Urethane
Weight	1540 g (54 oz)
Cable length	9 m (29.5ft)
Hole diameter	62 mm (2.44")

ST180D1kW

Function	Depth and Temperature
Frequency	CW 50 / 200 kHz
Mount type	Thru Hull, with fairing. Note: fairing block is optional
Deadrise	Max deadrise 20° with fairing block
Material	Stainless steel
RMS Power	1 kW
Beamwidth	50 kHz 14° x 19° @ -3db 200 kHz 3° x 5° @ -3db
Max Depth	Max @50 kHz = 670 m (2,200 ft) Max @200 kHz = 305 m (1,000 ft)
Temp. sensor	NTC
Acoustic window	Urethane
Weight	3600 g (126 oz)
Cable length	9 m (29.5ft)
Hole diameter	32 mm (1.25")

BT70L300

Function	Depth and Temperature
Frequency	Low CHIRP 40 - 75 kHz
Mount type	Thru Hull
Tilt / Deadrise	18° tilt version: for 16° to 24° hull deadrise 12° tilt version: for 8° to 15° hull deadrise 0° tilt version: for 0° to 7° hull deadrise
Material	Bronze
RMS Power	300 W
Beamwidth	47° to 35° @ 3db
Max Depth	Max 366 m (1200 ft)
Temp. sensor	NTC
Acoustic window	Urethane
Weight	1540 g (54 oz)
Cable length	9 m (29.5ft)
Hole diameter	62 mm (2.44")

BT70M300

Function	Depth and Temperature
Frequency	Medium CHIRP 95 - 155 kHz
Mount type	Thru Hull
Tilt / Deadrise	18° tilt version: for 16° to 24° hull deadrise 12° tilt version: for 8° to 15° hull deadrise 0° tilt version: for 0° to 7° hull deadrise
Material	Bronze
RMS Power	300 W
Beamwidth	23° to 17° @ 3db
Max Depth	Max 183 m (600 ft)
Temp. sensor	NTC
Acoustic window	Urethane
Weight	1540 g (54 oz)
Cable length	9 m (29.5ft)
Hole diameter	62 mm (2.44")

BT70M600 / ST70M600

Function	Depth and Temperature
Frequency	Medium CHIRP 80 - 130 kHz
Mount type	Thru Hull
Tilt / Deadrise	18° tilt version: for 16° to 24° hull deadrise 12° tilt version: for 8° to 15° hull deadrise 0° tilt version: for 0° to 7° hull deadrise
Material	Bronze / Stainless steel
RMS Power	600 W
Beamwidth	24° to 17° @ 3db
Max Depth	Max 274 m (900 ft)
Temp. sensor	NTC
Acoustic window	Urethane
Weight	1540 g (54 oz)
Cable length	9 m (29.5ft)
Hole diameter	62 mm (2.44")

BT70H600 / ST70H600

Function	Depth and Temperature
Frequency	High CHIRP 130 - 210 kHz
Mount type	Thru Hull
Tilt / Deadrise	18° tilt version: for 16° to 24° hull deadrise 12° tilt version: for 8° to 15° hull deadrise 0° tilt version: for 0° to 7° hull deadrise
Material	Bronze / Stainless steel
RMS Power	600 W
Beamwidth	17° to 11° @ 3db
Max Depth	Max 213 m (700 ft)
Temp. sensor	NTC
Acoustic window	Urethane
Weight	1540 g (54 oz)
Cable length	9 m (29.5ft)
Hole diameter	62 mm (2.44")

BT87M1kW / ST87M1kW

Function	Depth and Temperature
Frequency	Medium CHIRP 85 - 135 kHz
Mount type	Thru Hull
Tilt / Deadrise	18° tilt version: for 16° to 24° hull deadrise 12° tilt version: for 8° to 15° hull deadrise 0° tilt version: for 0° to 7° hull deadrise
Material	Bronze / Stainless steel
RMS Power	1 kW
Beamwidth	20° to 12° @ 3db
Max Depth	Max 457 m (1,499 ft)
Temp. sensor	NTC
Acoustic window	Urethane
Weight	3540 g (125 oz)
Cable length	9 m (29.5ft)
Hole diameter	90 mm (3.54")

BT87H1kW / ST87H1kW

Function	Depth and Temperature
Frequency	High CHIRP 130 - 210 kHz
Mount type	Thru Hull
Tilt / Deadrise	18° tilt version: for 16° to 24° hull deadrise 12° tilt version: for 8° to 15° hull deadrise 0° tilt version: for 0° to 7° hull deadrise
Material	Bronze / Stainless steel
RMS Power	1 kW
Beamwidth	13° to 8° @ -3db
Max Depth	Max 304 m (997 ft)
Temp. sensor	NTC
Acoustic window	Urethane
Weight	3540 g (125 oz)
Cable length	9 m (29.5ft)
Hole diameter	90 mm (3.54")

BT87L1KW / ST87L1KW

Function	Depth and Temperature
Frequency	Low CHIRP 40 - 60 kHz
Mount type	Thru Hull, low profile
Tilt / Deadrise	18° tilt version: for 16° to 24° hull deadrise 12° tilt version: for 8° to 15° hull deadrise 0° tilt version: for 0° to 7° hull deadrise
Material	Bronze / Stainless Steel
RMS Power	1 kW
Beamwidth	33° to 22° @ 3db
Max Depth	Max 762 m (2,500 ft)
Temp. sensor	NTC
Acoustic window	Urethane
Weight	3540 g (125 oz)
Cable length	9 m (29.5ft)
Hole diameter	90 mm (3.54")

TM87M1KW

Function	Depth and Temperature
Frequency	Medium CHIRP 85 - 135 kHz
RMS Power	1KW
Mount type	Transom Mount
Material	Plastic + Stainless Steel
Transom Angle	0° - 70°
Beamwidth	20° to 12° @ 3db
Max Depth	Max 457 m (1,499 ft)
Temp. sensor	NTC
Acoustic window	Urethane
Weight	2000 g (70 oz)
Cable length	9 m (29.5 ft)
Bracket	Stainless Steel

TM87H1KW

Function	Depth and Temperature
Frequency	High CHIRP 130 - 210 kHz
RMS Power	1KW
Mount type	Transom Mount
Material	Plastic + Stainless Steel
Transom Angle	0° - 70°
Beamwidth	13° to 8° @ -3db
Max Depth	Max 304 m (997 ft)
Temp. sensor	NTC
Acoustic window	Urethane
Weight	2000 g (70 oz)
Cable length	9 m (29.5 ft)
Bracket	Stainless Steel

Specifications subject to change without notice

Technical Specifications

TM70D600

Function	Depth and Temperature
Frequency	CW 50 / 200 kHz
RMS Power	600W
Mount type	Transom Mount
Material	Plastic + Stainless Steel
Transom Angle	0° - 70°
Beamwidth	42° / 11° @ -3db
Max Depth	Max @50 kHz = 365 m (1,200 ft) Max @200 kHz = 206 m (700 ft)
Temp. sensor	NTC
Acoustic window	Urethane
Weight	1000 g (35 oz)
Cable length	9 m (29.5 ft)
Bracket	Stainless Steel

TM70M300

Function	Depth and Temperature
Frequency	Medium CHIRP 95 -155 kHz
RMS Power	300W
Mount type	Transom Mount
Material	Plastic + Stainless Steel
Transom Angle	0° - 70°
Beamwidth	23° to 17° @ 3db
Max Depth	Max 183 m (600 ft)
Temp. sensor	NTC
Acoustic window	Urethane
Weight	1000 g (35 oz)
Cable length	9 m (29.5 ft)
Bracket	Stainless Steel

TM70M600

Function	Depth and Temperature
Frequency	Medium CHIRP 80 - 130 kHz
RMS Power	600W
Mount type	Transom Mount
Material	Plastic + Stainless Steel
Transom Angle	0° - 70°
Beamwidth	26° to 16° @ 3db
Max Depth	Max 274 m (900 ft)
Temp. sensor	NTC
Acoustic window	Urethane
Weight	1000 g (35 oz)
Cable length	9 m (29.5 ft)
Bracket	Stainless Steel

TM70H600

Function	Depth and Temperature
Frequency	High CHIRP 130 - 210 kHz
RMS Power	600W
Mount type	Transom Mount
Material	Plastic / Stainless steel
Transom Angle	0° - 70°
Beamwidth	17° to 11° @ 3db
Max Depth	Max 213 m (700 ft)
Temp. sensor	NTC
Acoustic window	Urethane
Weight	1000 g (35 oz)
Cable length	9 m (29.5 ft)
Bracket	Stainless Steel

CB131M600

Function	Depth and Temperature
Frequency	Medium CHIRP 80 -130 kHz
RMS Power	600W
Mount type	Thru Hull, with fairing. Note: fairing block is optional
Material	Bronze
Deadrise	Max deadrise 20° with fairing block
Beamwidth	24° to 17° @ 3db
Max Depth	Max 274 m (900 ft)
Temp. sensor	NTC
Acoustic window	Urethane
Weight	1400 g (49 oz)
Cable length	9 m (29.5 ft)
Hole diameter	25 mm (0.98")

CB131H600

Function	Depth and Temperature
Frequency	High CHIRP 130 -210 kHz
RMS Power	600W
Mount type	Thru Hull, with fairing. Note: fairing block is optional
Material	Bronze
Deadrise	Max deadrise 20° with fairing block
Beamwidth	17° to 11° @ -3db
Max Depth	Max 213 m (700 ft)
Temp. sensor	NTC
Acoustic window	Urethane
Weight	1400 g (49 oz)
Cable length	9 m (29.5 ft)
Hole diameter	25 mm (0.98")

CB131M1KW

Function	Depth and Temperature
Frequency	Medium CHIRP 85 - 135 kHz
RMS Power	1KW
Mount type	Thru Hull, with fairing. Note: fairing block is optional
Material	Bronze
Deadrise	Max deadrise 20° with fairing block
Beamwidth	20° to 12° @ 3db
Max Depth	Max 457 m (1,499 ft)
Temp. sensor	NTC
Acoustic window	Urethane
Weight	1540 g (54 oz)
Cable length	9 m (29.5 ft)
Hole diameter	25 mm (0.98")

CB131H1KW

Function	Depth and Temperature
Frequency	High CHIRP 130 - 210 kHz
RMS Power	1KW
Mount type	Thru Hull, with fairing. Note: fairing block is optional
Material	Bronze
Deadrise	Max deadrise 20° with fairing block
Beamwidth	13° to 8° @ 3db
Max Depth	Max 304 m (997 ft)
Temp. sensor	NTC
Acoustic window	Urethane
Weight	1540 g (54 oz)
Cable length	9 m (29.5 ft)
Hole diameter	25 mm (0.98")

Specifications subject to change without notice

Mix and Match Adapter Cables



Echonautics transducers come with 9-meter/29.5 foot cables and standard 8-PIN Male connectors. 1-meter/3.3 foot adapter cables are available through Echonautics.

CBCCMS0501 Adapter Cable
Male 8-PIN black box connector (Seiwa, SI-TEX, Lorenz, JMC, Polar, MPS and JRC-Europe FF-901)

CBCCMS0503 Adapter Cable
Female 8-PIN Garmin connector

CBCCMS0502 Adapter Cable
Male 9-PIN Navico connector (Lowrance, Simrad, B&G)

These mix-and-match adapter cables make it simple to integrate high-performance Echonautics transducers with popular sonar systems from leading manufacturers.

Precision, Performance and Reliability

The CHIRP Advantage

Traditional marine echosounders operate at set frequencies (50 or 200kHz, for example) and transmit a short-duration pulse to display targets under the boat that can be identified by the specific frequency being used.

CHIRP sonar (which stands for Compressed High Intensity Radar Pulse) emits a sweep pattern of many frequencies within a long-duration pulse. As a result, the sound energy delivered underwater is 10 to 1000 times more powerful than conventional sonar — providing better deep-water penetration, improved fish detection and target separation, enhanced bottom detail and better sonar performance at higher vessel speeds.

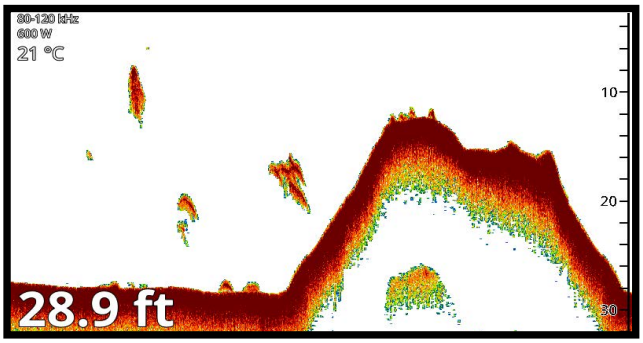

CHIRP sonar displays amazing detail and target separation

CHIRP sonar performance can be further enhanced by selecting a transducer style and CHIRP frequency range that best matches the vessel, water conditions, depths fished, and target species. For this reason, Echonautics offers a range of CHIRP transducers in Low, Medium, and High CHIRP frequency ranges. Our experts can help you find the ideal CHIRP transducer and frequency range to maximize your fishing success.

Echonautics Fairing Blocks

Echonautics optional high-speed fairing blocks are custom engineered to work with both bronze and stainless-steel thru-hull transducers. Mounting your transducer with a fairing block provides several advantages. It minimizes the effect the transducer has on the boat's ride at speed, ensures a vertical beam orientation and provides a flow of clean water across the transducer face for optimum performance. This is a highly popular installation option for a wide variety of vessels, delivering excellent sonar performance at all vessel speeds.



Engineering DNA

Echonautics is the result of a joint-venture between an American company specialized in transducers R&D and design and TWS Group - AvMap, an Italian manufacturer of marine electronics since 1985, born to offer a high-quality range of transducers ready to deliver to the marine industry worldwide.

Our team brings extensive experience from TWS & AvMap engineering and marine electronics development. This foundation allows Echonautics to approach transducer design with a deep understanding of acoustics, materials, and system integration.

- ✓ 45 years of engineering and manufacturing expertise
- ✓ Pioneers in marine electronics from GPS displays, to receivers, telematics boxes, sonars and fishfinders
- ✓ Partnership with major marine electronics brands worldwide

BRTENENAE011

Echonautics®
soundwave innovation

www.echonautics.com

SALES NORTH AMERICA
AvMap Satellite Navigation Inc.
25 Enterprise Zone Drive,
Riverhead, NY 11901, USA
Tel: +1 631 996 2690
E-mail: orders@avmap.us

SALES EMEA, LATAM, APAC
AvMap s.r.l.
Viale Zaccagna 6, 54033
Carrara (MS), ITALY
Tel: +39 0585 772305
E-mail: orders@avmap.it

To ask about this model or to buy

Every sale is made direct, so you can talk it through first

Call

Michael McGlinn

0494 901 661

sales@westcoastmarineelectronics.com.au

https://westcoastmarineelectronics.com.au/

West Coast Marine Electronics, Fremantle, Western Australia

This page was added by West Coast Marine Electronics. The pages of this brochure are the maker's own and have not been changed.
Makers change specifications from time to time, so please call to confirm before you rely on them.